6. APPROACHES

6.1 Introduction

Estimation of PMP in orographic regions is difficult. Storm data are limited. This is the result of a low population density that restricts the number of regular observing stations and also limits the effectiveness of supplementary precipitation surveys. In addition, the complicating effects of terrain on storm structure and precipitation must be considered. In the present study, several procedures were investigated, but primary reliance was placed on a procedure that separates the effect of orography from the dynamic effects of the storm.

6.2 Orographic Models

Orographic models based on laminar flow assumptions were evaluated. The Rhea model (1978) was considered as an alternative approach to computing PMP for this region. That model is a modification and improvement of the model used in Hydrometeorological Report No. 36 "Interim Report - Probable Maximum Precipitation in California" (U.S. Weather Bureau 1961). It is a steady-state, two-dimensional model which accounts for the vertical wind profile by using multilayer bands. Although the model is strictly orographic, effects of large scale vertical motion are added to topographic effects. The model was used to replicate the precipitation distribution in recent major storms. Most effort was directed toward evaluation of the June 6-8, 1964 Gibson Dam, MT storm (75). The results did not compare well to the manual analysis of observed precipitation (fig. 2.14). The primary difficulty probably resulted from the inability to incorporate low-level easterly upslope flow with the predominate westerlies in the upper levels of the atmosphere. Another problem area related to the difficulty of including appropriate time and space variations of the input parameters to accurately define the detailed variation of rainfall over this geographic region. These difficulties led to the abandonment of this approach as a method for estimating PMP for this region. Some model runs were considered, however, to provide qualitative information on relative distribution of rainfall along various slopes.

6.3 Traditional Approach

The primary method developed for estimating PMP in relatively flat regions is the moisture maximization and transposition of observed storm amounts. This procedure was used to a very limited extent in this region. The primary usefulness was in the relatively flat plains regions of eastern Montana, Wyoming, Colorado, New Mexico, and western Texas. In these regions there is little variation in topography and the methods used in the development of HMR No. 51 are applicable. The reader is referred to that publication for a detailed discussion of the methodology.

In addition to the plains region, the technique is appropriate for estimating PMP in the immediate vicinity of the most extreme storms in orographic regions. In limited other portions of the region where similar topography exists, the observed storm amounts may be transposed. Usually an index map, such as a mean annual precipitation or rainfall-frequency (e.g., 100-yr 24-hr) map is used to extend the range of possible transposition locations. Generally, transpositions are limited additionally by requiring the index values at the storm location and the transposed location to agree within a few percent. The 100-yr 24-hr map from NOAA Atlas 2 (Miller et al. 1973) was used as the rainfall index in this study for transposition of observed rainfall amounts.

6.4 Storm Separation Method

The terrain of the study region had a marked effect upon the procedures used to develop PMP estimates. The terrain varies from the relatively flat plains in eastern Montana, Wyoming, Colorado, New Mexico, and western Texas to the complex and rugged mountain ranges and valleys through the western portion of the region. It was necessary to find a procedure which would enable the precipitation potential for this diverse terrain to be analyzed in a consistent fashion. The adopted procedure has some similarities to those used in other studies for the western United States. The precipitation that results from atmospheric forces (convergence precipitation) involved in the major storms in the region is defined. Convergence precipitation amounts were determined for the 24-hr 10-mi^2 precipitation amounts for all major storms in the region. These adjusted rainfall values were moisture maximized and transposed to locations where similar storms have occurred. These moisture maximized, transposed values were then analyzed to develop a generalized map of convergence PMP throughout the region.

Values of convergence rainfall were increased for orographic effects that occur over the region. The orographic intensification factor is developed from the 100-yr 24-hr precipitation-frequency amounts of NOAA Atlas 2 (Miller et al. 1973). Since the dynamic strength of a storm varies from the most intense 1-, 2-, 3-, or 6-hr period through the end of the storm, it is not appropriate to apply the same orographic intensification factor throughout the entire storm. To vary this intensification factor, a storm intensity factor was developed. Since it had been decided to place primary reliance on developing the 24-hr 10-mi^2 PMP, it was necessary to define a "core" or most intense portion of this storm. The characteristic length of the most intense rainfall period for this region for the 24-hr storm was determined to be 6 hr. The storm intensification factor reduced the effect of the orographic factor during the most intense rainfall period of the maximum 24 hr of the storm. The basic orographic influence is retained, undiminished, during the remaining hours. After determining the 24-hr 10-mi^2 PMP, 6-/24- and 72-/24-hr ratio maps were used to develop PMP values for these two other index durations for the 10-mi^2 area. Finally, a 1-hr 10-mi^2 PMP map was developed using a 1-/6-hr ratio map. These four maps provide the key estimates of general-storm PMP for the region.

6.5 Depth-Area Relations

The technique discussed in sections 6.3 and 6.4 provide 10-mi^2, or point, estimates of general-storm PMP for four index durations. For most applications, values for larger areas are required. Depth-area relations were developed utilizing data from the important storms of record in and near the study region to permit estimates for larger areas. These relations provide percentages to estimate PMP for areas as large as 5,000 mi^2 west of the orographic separation line and to 20,000 mi^2 east of that line.

Since the storm types capable of producing PMP rainfall are different in the northern and southern portions of the region, different depth-area relations are required for these disparate regions. Differences also exist between orographic and nonorographic portions of the study region. These differences resulted in a set of depth-area relations. The development of these relations is presented in chapter 11.

6.6 Local-Storm PMP

Local-storm PMP has been developed for the CD-103 region in a manner similar to that for local storms in HMR No. 49 (Hansen et al. 1977). These storms occur independently from storms considered in the general-storm category. Although local-storm PMP has been developed throughout the region in this study, there is no evidence to indicate significant (controlling) local storms have occurred east of the 103rd meridian. Therefore, it was reasoned that the controlling influence of the local storm west of the Continental Divide disappears somewhere within the CD-103 region. Chapters 12 and 13 discuss where this occurs as a result of the development undertaken in this report. Local storms are short duration (<6 hr), small area (<500 mi^2), isolated events that occur seemingly independent of synoptic scale features. The methodology used for this development was moisture maximization and transposition of the major local-storm amounts that have occurred in the region between the Continental Divide and the 103rd meridian. The development of local-storm PMP is discussed in chapter 12.

7. STORM SEPARATION METHOD

7.1 Introduction

In order to establish PMP in the CD-103 region, it was considered necessary to find a property of observed major storm precipitation events that is only minimally effected by terrain so transposition of observed precipitation amounts would not be limited to places where the terrain characteristics are the same as those at the place where the storm occurred. The name given to this idealized property is "free atmospheric forced precipitation" (FAFP) which has been called "convergence only" precipitation in publications such as HMR No. 49 (Hansen et al. 1977). For a more complete definition of FAFP, see the Glossary of Terms in section 7.2. It is emphasized that FAFP is an idealized property of precipitation since no experiment has yet been devised to identify in nature which raindrops were formed by orographic forcing and which by atmospheric forcing. This chapter explains how FAFP may be estimated for specific storms. Background information is provided on the development of the storm separation method (SSM).

7.2 Glossary of Terms

Terms frequently used in the SSM are listed alphabetically.

A_o: See P_a. It is the term for the effectiveness of orographic forcing used in module 3.

<u>AI</u>: The analysis interval, in inches, for the isohyets drawn for a storm.

B_i: See PCT2. It is the term representing the "triggering effects" of orography. It is used in module 2. B_i is a number between 0 and 1.0 representing the degree of FAFP implied by the relative positioning of the 1st through i-th isohyetal maxima with those terrain features (steepest slopes, prominences, converging upslope valleys) generally thought to induce or "stimulate" precipitation. A high positive correlation between terrain features and isohyetal maxima yields a low value for B_i. For each isohyetal maximum there is just one

B-type correlation and, thus, if the area covered by a given maximum is extensive enough so that more than one area category is contained within its limits, the B correlations are determined using all isohyets comprising a particular maximum. For the larger-area/shorter-duration categories, the B_i correlation may need to be made in widely separated, noncontiguous areas.

When available, the chart of maximum depth-area-duration curves from the Part II Summary of the storm analysis*, along with its associated documentation, is the primary source for determining how many centers (n) and which isohyetal maxima were used to determine the average depth for the area being considered.

BFAC: 0.95 (RCAT). It represents an upper limit for FAFP in modules 2 and 5. See also the definition for PX.

DADRF: The depth-area-duration reduction factor is the ratio of two average depths of precipitation.

DADRF = RCAT/MXVATS

DADFX: DADFX = (HIFX)(DADRF). It is used in module 2 to represent the largest amount of nonorographic precipitation caused by the same atmospheric mechanism that produced MXVATS.

F_i: See PCT2. It is the term for the "upsloping effects" of orography and it is used in module 2. It is a number between 0 and 1.0, which represents the degree of atmospheric forcing implied by the orientation of the applicable upwind segments of the isohyets with elevation contours (high positive correlation of these parameters means a low value for F_i) for the 1st through i-th maxima. For an isohyetal maximum there is just one F-type correlation, and if the area covered by a given maximum is extensive enough so that more than one area category is contained within its limits, the F correlations are the same for each of the area catagories. F-type correlations are determined using all isohyets comprising a particular maximum. As with B-type correlations, maximum depth-area-duration curves from the Part II of the storm report should be used to determine which precipitation centers are involved in the isohyetal maximum.

---

*A depth-area-duration storm analysis is separated into two parts. The first part develops a preliminary isohyetal map and mass curves of rainfall for all stations in the storm area. The second part includes a final isohyetal map, computation of the average depth of rainfall over all isohyetal areas and determination of the maximum average depth for all area sizes up to the total storm area. The complete procedure used for making depth-area-duration analysis is described in "Manual for Depth-Area-Duration Analysis of Storm Precipitation" (World Meteorological Organization 1986).

FAFP: Free Atmospheric Forced Precipitation is the precipitation not caused by orographic forcing; i.e., it is precipitation caused by the dynamic, thermodynamic, and microphysical processes of the atmosphere. It is all the precipitation from a storm occurring in an area where terrain influence or forcing is negligible, termed a nonorographic area. In areas classified as orographic, it is that part of the total precipitation which remains when amounts attributable to orographic forcing have been removed. Factors involved in the production of FAFP are: convergence at middle and low tropospheric levels and often, divergence at high levels; buoyancy arising from heating and instability; forcing from mesoscale systems, i.e., pseudo fronts, squall lines, bubble highs, etc.; storm structure, especially at the thunderstorm scale involving the interaction of precipitation unloading with the storm sustaining updraft; and lastly, condensation efficiency involving the role of hydroscopic nuclei and the heights of the condensation and freezing levels.

HIFX: The largest isohyetal value in the nonorographic part of the storm. The same atmospheric forces (storm mechanism) must be the cause of precipitation over the areas covered by the isohyet used to determine HIFX and MXVATS.

I_m: That part of RCAT attributed solely to atmospheric processes and having the dimension of depth. Since it is postulated that FAFP cannot be directly observed in an orographic area, some finite portion of it was caused by forcing other than free atmospheric. The FAFP component of the total depth must always be derived by making one or more assumptions about how the precipitation was caused. The subscript "m" identifies the single assumption or set of assumptions used to derive the amount designated by I. For example, a subscript of 2 will refer to the assumptions used in module 2. The key assumptions of all the modules are detailed in section 7.3.1. Refer to the schematic for each module in figures 7.3 to 7.6 for the specific formulation for each I_m.

LOFACA: LOFACA is the lowest isohyetal value at which it first becomes clear to the analyst that the topography is influencing the distribution of precipitation depths. Confirmation of this influence is assumed to occur when good correlation is observed between the LOFACA isohyet and one or more elevation contours in the orographic part of the storm.

How is LOFACA found? A schematic isohyetal pattern is shown by the solid lines in figure 7.1 to illustrate this procedure. Start at the storm center and follow the inflow wind direction out to the lowest valued isohyet in the analysis (no lower than 1 in.) located in the orographic part of the storm. If the storm pattern is oddly shaped, it may be necessary to use a direction slightly different from the exact inflow direction. Any direction within ± 22.5 degrees either side of the inflow direction which allows comparisons of the sort described above is acceptable. The vector CL in the schematic of figure 7.1 represents the path in this storm that is parallel to the inflow wind and directed at the lowest valued isohyet. Next, draw

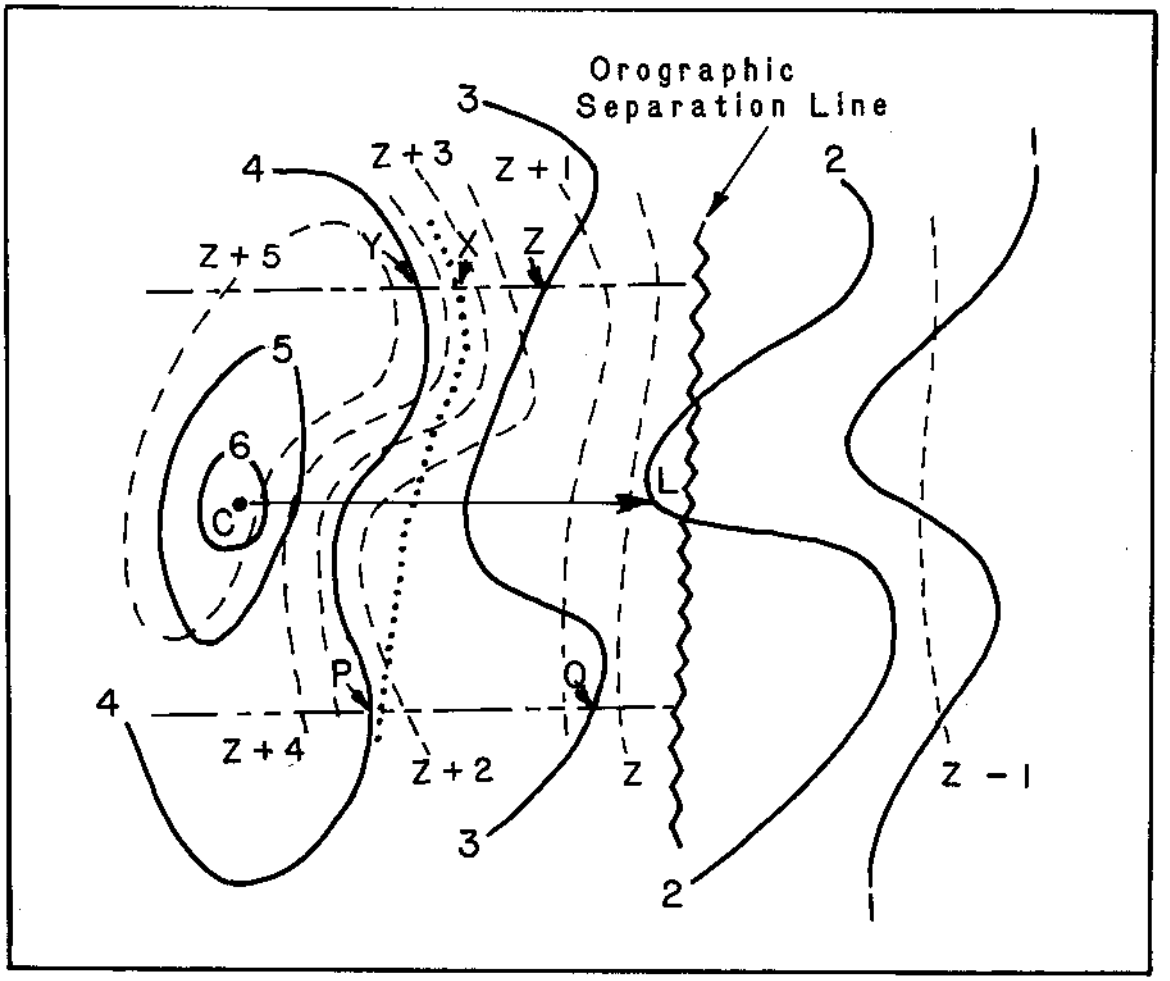

Figure 7.1.--Schematic illustrating determination of LOFACA.

two lines parallel to and either side of the vector CL. Each of the parallel lines will be drawn at a distance from CL of 1/2 the length of CL. These lines are the dash-dot lines in figure 7.1. These lines will be called "range lines." The range lines end at the orographic separation line (the saw-toothed line in figure 7.1) since only correlations in the orographic part of the storm are important in determining LOFACA.

The next step is to examine those isohyets which intersect the range lines down wind of the storm center of isohyetal maximum. Such segments are considered candidate isohyetal segments (CIS) and they are depicted by the segments of the isohyets PY and QZ in figure 7.1. The objective is to determine which CIS has a good correlation with topographic features indicated by the dashed lines. A good correlation is a CIS that parallels one of the smoothed elevation contours along one-half or more of its length. When no isohyet is found meeting the criterion, LOFACA is defined to be zero. As depicted in the schematic, the 4-in. CIS indicated by the solid line (from P to Y) shows a good correlation with the Z + 2 and Z + 3 contours, so the value of LOFACA is 4 in. If the 4-in. isohyet in figure 7.1 had been along the dotted line from P to X,

there would have been a poor correlation and the value of LOFACA would have been zero for this storm.

The significance of LOFACA is that precipitation depths at and below this value are assumed to have been produced solely by atmospheric forces without any additional precipitation resulting from topographic effects; i.e., they represent the "minimum level" of FAFP for the storm. If more than one isohyetal center exists for the area size selected, the procedure is followed for each center. If the value of LOFACA is different for two or more of these centers, the lowest of the values is used as the one and only value of LOFACA for that storm and area size.

LOFAC: $$\text{LOFAC} = \text{LOFACA} + \frac{\text{AI}}{2}\left(\text{PB}^{\frac{(\text{AI})}{2}} - 1\right).$$

It is a refinement to LOFACA based on the concept that AI may prejudice the assigning of a minimum level of FAFP.

MXVATS: The average depth of precipitation for the total storm duration for the smallest area size analyzed, provided that it is not larger than 100 mi^2. It is obtained from the pertinent data sheet (P.D.S.) for the storm included in "Storm Rainfall" (Corps of Engineers 1945 -). It is used in several modules to calculate percentages of FAFP. If the area criterion cannot be met, the storm is not used in the study.

n: When used in module 2 it is the number of analyzed isohyetal maxima used to set the average depth of precipitation for a given area size.

OSL: Orographic Separation Line is a line which separates the CD-103 region into two distinct regions, where there are different orographic affects on the precipitation process. In one region, the nonorographic, it is assumed no more than a 5-percent change (in either increasing or decreasing the precipitation amount for any storm or series of storms) results from terrain effects. In contrast, the other region is one where the influence of terrain on the precipitation process is significant. An upper limit of 95 percent and a lower limit of no less than 5 percent is allowed. The line may exist anywhere from a few to 20 miles upwind (where the wind direction is that which is judged to prevail in typical record setting storms) of the point at which the terrain slope equals or exceeds 1,000 ft om 5 miles or less with respect to the inflowing wind direction (sec. 3.2).

P_a: P_a (and A_o) is a ratio in which the effectiveness of an actual storm in producing precipitation is compared with a conceptualized storm of "perfect" effectiveness. In such a conceptual model, features known by experience to be highly correlated with positive vertical motions, or an efficient storm structure, would be numerous and exist at an optimum (not always the largest or strongest) intensity level.

Thus,

$$P_a = \frac{\text{Effectiveness of Actual Atmospheric Mechanisms}}{100}$$

where the numerator is a number between 5 and 95

$$A_o = \frac{\text{Effectiveness of Actual Orographic Mechanisms}}{100}$$

where the numerator is a number between 0 and ±95.

It would have been desirable to express both P_a and A_o in physically meaningful units; however, this was not considered practical because the available meteorological data for most of the storms of concern are generally extremely limited. Hence, the present formulation is expressed in terms of subjective inferences about physical parameters known to be effective in the production of precipitation either in major storms in nonorographic regions or by considering the results of flow of saturated air against orographic barriers. This type of formulation is required, because of the limited availability of meteorological information for the storms, but is considered adequate for the purposes of this report. Mechanically, the effectiveness of the particular storm is derived by using the checklists in module 3.

PA: The ratio of the nonorographic area containing precipitation to the total storm precipitation area is given by PA. Its inverse is used when setting a realistic upper limit for I_2 and I_5 (see definition for PX on the following page). Areas in which the depth of precipitation is less than 1 in. are not used in forming the ratio. In contrast to PC, PA does not depend upon the area size being considered in the storm separation method.

PB: When the LOFACA isohyet does not extend from the orographic part into the nonorographic part of the storm, it is the ratio of the sum of the areas in the nonorographic part containing amounts equal to or greater than LOFACA (the numerator) to the total nonorographic area in which precipitation depths associated with the storm are 1 in. or more. When the LOFACA isohyet does extend into the nonorographic part of the storm, the numerator is increased by an amount representing the area bounded by the LOFACA isohyet and the OSL. It is used in module 2 in setting a value for LOFAC. Note: when LOFACA is zero, PB will be one and LOFAC will also equal zero.

PC: It is used in the formulations of PCTI, PCT2, and PCT3 to take into account the contribution of nonorographic precipitation to total FAFP (which includes FAFP contributions from orographic areas). It is expressed as a number between 0 and 0.95 The value of the upper limit is 0.95 because no storm in which more than 95 percent of the precipitation fell in nonorographic areas was considered. Thus, some storms from the list of important storms were not considered since they occurred in the nonorographic region.

If, for the area size being considered, part of the total volume of precipitation occurred in a nonorographic area, PC is the ratio of

that partial volume to the total volume. If none of the total volume was nonorographic, PC = 0. The ratio of volumes is obtained by forming the ratio of the corresponding area sizes first, then multiplying that ratio by an estimate of the average depth in the nonorographic area, and finally dividing this result by the average depth for the total area, both of these depths occurring at maximum duration.

PX: is the smaller of either BFAC or DADFX multiplied by $(PA)^{-1}$ except when PA = 0, in which case PX = BFAC. Once selected, PX serves to define what is a realistic upper limit for I_2 and I_5.

PCT1: $$PCT1 = PC + \frac{RNOVAL}{MXVATS}(0.95-PC).$$

MXVATS is used only for the smallest area size on the P.D.S. (provided that it is not greater than 100 mi^2) because the average depth at larger area sizes is influenced by how isohyets were drawn.

PCT2: $$PCT2 = PC + \left(\frac{\sum_{i=1}^{n}(F_i + B_i)}{2n}\right)(0.95 - PC)$$

It is a number between 0 and 0.95 where n is the number of isohyetal maxima in the orographic part of the storm applicable to the area/duration category being considered. Estimates of F- and B-type correlations are dependent upon the quality of the isohyetal analysis and upon proper identification of the precipitation centers involved in the area category under consideration. When there is no Part II storm study information available, the analyst must decide whether a reasonable estimate can be made for n. When there are just a few maxima, each at a different depth, a reasonable estimate is likely, whereas when there are numerous maxima all of which are for the same depth and which enclose about the same area, it is less likely that a reliable value for PCT2 can be calculated. When the latter is the case, the answer to question 13 in module 2 will be "no" and the analyst documents this situation in module 5 after completing modules 3 and 4.

PCT22: This is the ratio I_2/RCAT where I_2 is the total amount of RCAT that is FAFP. I_2 is defined by the relationship:

$$I_2 = [LOFAC + (MXVATS-LOFAC)PCT2]DADRF$$

Substitution of these terms into the definition for PCT22 leads to the relationship:

$$PCT22 = PCT2 + \left(\frac{LOFAC}{MXVATS}\right)(1-PCT2)$$

PCT3: $$PCT3 = PC + \left(\frac{P_a}{P_a + A_o}\right)(0.95-PC)$$

It is a dimensionless number usually between 0.05 and 0.95, representing the percent of the total depth of precipitation for a given area/duration category attributable to the atmospheric

processes alone. It is obtained not only by considering primarily meteorological information, but also by considering the following minimal list of additional information: a P.D.S. for the storm (DAD data) including the location of the storm center; a chart of smoothed contours of terrain elevation; and precipitation data sufficient to define where precipitation did or did not occur. More detailed precipitation information is used, when available.

The range of 0.05 to 0.95 is considered reasonable, because it is postulated that the orographic influence never completely vanishes, and when the orographic influence is predominant, precipitation would not continue without some contribution from atmospheric forcing mechanisms. Though not expected to occur, it is conceivable that PCT3 may exceed 0.95 if the estimated orographic forcing was downslope, actually decreasing the total possible precipitation. This matter is discussed further in the section dealing with module 3. The formulation for PCT3 is meant to apply only to major storms and definitely not to minor storms where negative terrain forcing on lee slopes might approach, or exceed, the magnitude of the atmospheric forcing.

RCAT: The average depth of precipitation for the selected category. The "CAT" indicates that the parameter R is a variable depending on category definition.

RNOVAL: Representative nonorographic value of precipitation. It is the highest observed amount in the nonorographic part of the storm. The value of RNOVAL is not adjusted to the elevation at which MXVATS is believed to have occurred. RNOVAL and MXVATS must result from the same atmospheric forces (storm mechanism).

7.3 Background

The SSM was developed in the present format because four distinct sets of precipitation information were available for record-setting storms in the CD-103 region. These were:

1. Reported total storm precipitation, used in module 1.

2. Isohyet and depth-area-duration analyses of total storm precipitation, including Part I and Part II Summaries, used in module 2.

3. Meteorological data and analyses therefrom, used in module 3.

4. Topographic charts, used in all modules.

Since the quantity and quality of the information in the first three of these sets would vary from storm to storm, it was concluded that a method which relied on just one of the first three sets (along with topographic charts) might be quite useless for certain storms. Alternatively, one could have a SSM which always combined information from the first three sets. This choice was rejected since, for most of the storms, one or more of the sets might contain no useful information and bogus data would have to be used. Clearly, the SSM depends on the validity of the input information.

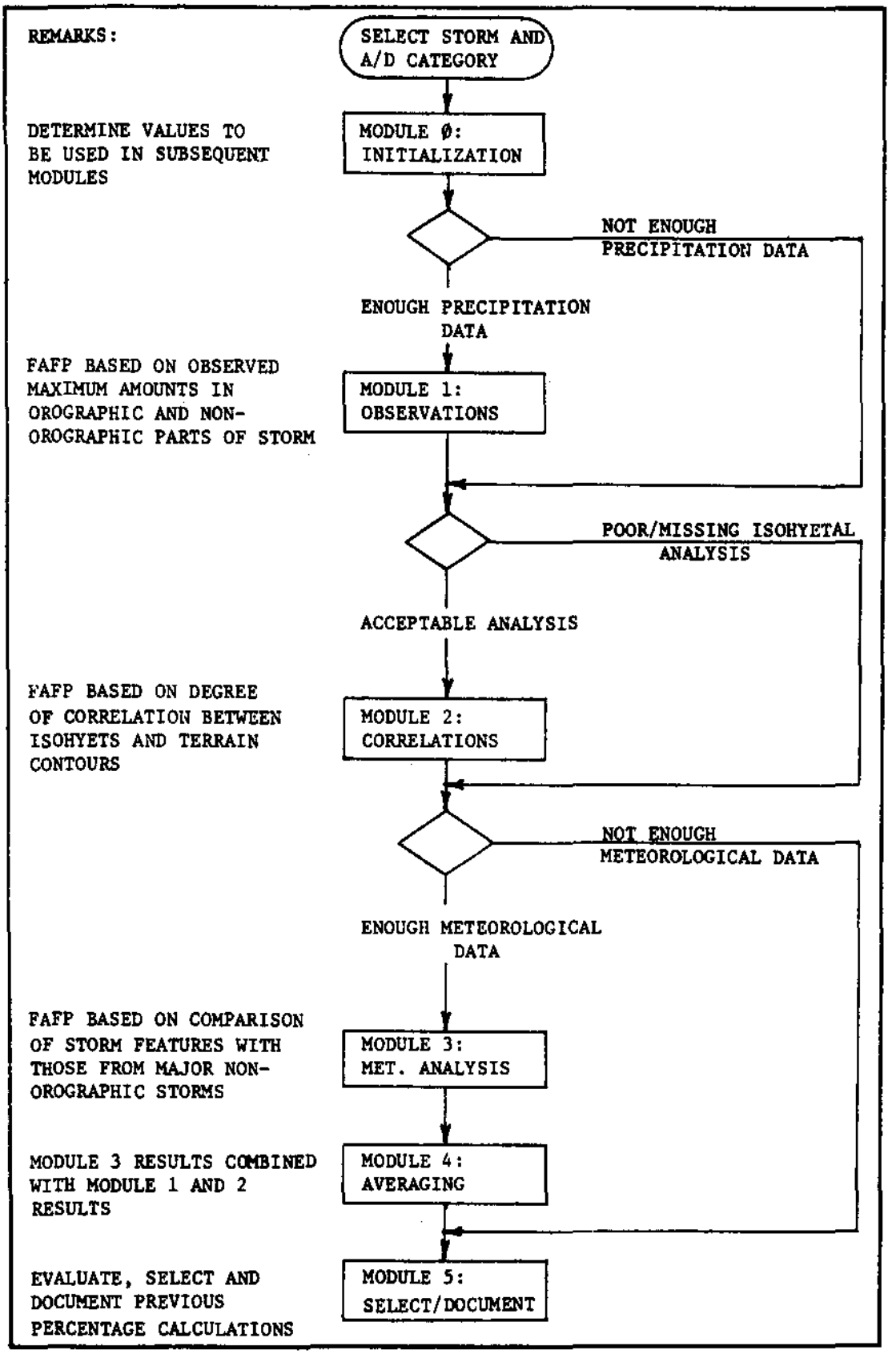

Figure 7.2.—Main flowchart for SSM.

Four sets of information are used in the SSM to produce up to five estimates of FAFP for area categories up to 5,000 mi^2 and durations up to 72 hr for storms with major rainfall centers in areas classified as "orographic." The mechanics of the procedure used to arrive at one numerical value of FAFP for any relevant area/duration (A/D) category for any qualifying storm are accomplished by completing the tasks symbolically represented in a MAIN FLOWCHART for the SSM (fig. 7.2) along with its associated SSM MODULE FLOWCHARTS (fig. 7.3 to 7.7) with references to the following items:

1. Glossary of Terms (sec. 7.2).

2. Concepts for use of the modules (sec. 7.3.1).

3. Specific questions to be answered in the MAIN FLOWCHART and the MODULE FLOWCHARTS.

7.3.1 Basic Concepts

The validity of the techniques in the SSM depends on the validity of the concepts upon which they are based. Evaluation of these concepts is crucial in the application of the procedure. A relative evaluation of the validity of the concepts underlying the individual modules will govern which of the five possible values will be used for FAFP for a given A/D category. The evaluation is formalized in module 5 (column E) of the SSM based on the analysts evaluation of the various concepts. Several concepts are basic to acceptance of the procedure as a whole (all modules) while others relate to the evaluation of individual modules.

7.3.1.1 Overall Method. The total depth of precipitation for a given A/D category is composed of precipitation that results from atmospheric forces and from the added effect of orography. The method assumes that the effect of orography may either contribute to or take away from the amount of precipitation that is produced by the atmosphere. When the orographic effect is positive (expressed as a percentage contribution to total precipitation), it may not be less than 5 percent. If it is also assumed that the terrain surrounding the location where a given storm of record occurred had been transparent; i.e., had no effect on the atmospheric forces acting there, the resulting total precipitation would be the same as the free air forced component of precipitation for the actual storm.

It is assumed that the FAFP never completely disappears in storms of record, and the total volume may contain contributions over both the orographic and nonorographic areas. The further assumption is made that, when no other information is available at the shorter durations, inferences made from precipitation depths valid at maximum storm duration for a given area are equally valid for the same area at shorter durations down to and including the minimum duration category.

7.3.1.2 Module 1. There are three components that underlie the use of precipitation observations in the estimation of the contribution of the atmosphere to the precipitation amounts in storms. These are:

1. If free atmospheric forcing in the nonorographic part of the storm had been smaller that it was, the value of the maximum depth of precipitation would have been proportionally less.

2. The FAFP in the orographic region of the storm is approximated by the maximum precipitation depths in the nonorographic region, as long as the same atmospheric forces are involved at each location.

3. Estimates of the FAFP based on assumptions 1 and 2 are better for small rather than intermediate or large area sizes.

7.3.1.3 Module 2. This module uses an isohyetal analysis of the precipitation data to evaluate the free air forced component of precipitation. Inherent in the use of this module is the existence of an isohyetal analysis based on adequate precipitation information and prepared without undue reliance on normal annual precipitation or other rainfall indices which may induce a spurious correlation between the precipitation amounts and topography. In addition, there are five other concepts underlying this module. These are:

1. One or more than one level of LOFACA may exist in the orographic part of a storm. When more than one storm center is contained in a given area category, the lowest level of LOFACA found is used for that area size.

2. LOFACA exists when there is a good correlation between some isohyet and elevation contours.

3. Upsloping and triggering (F- and B-type correlations) are of equal significance in determining the percentage of precipitation above LOFACA which is terrain forced.

4. For an orographic storm (centered in th orographic portion of the region), the larger the nonorographic portion becomes (in relation to the total storm area), the more likely that the observed largest rainfall amount in the nonorographic portion (as represented by DADFX) is the "true" upper limit to FAFP in the orographic part of the storm.

5. Estimates of FAFP using the above assumptions are better at intermediate and large rather than small area sizes.

7.3.1.4 Module 3. This module makes use of the meteorological analysis and the evaluation of the interaction of dynamic mechanisms of the atmosphere with terrain to estimate the FAFP. There are seven basic concepts underlying the use of this module. These are:

1. Estimates of FAFP made using the techniques of this module may be of marginal reliability if the storms considered are those producing moderate or lesser precipitation amounts.

2. A variety of storms exist, each one of which has an optimum configuration for producing extreme precipitation.

3. The more closely the atmospheric forcing mechanisms for a given storm approach the ideal effectiveness for that type of storm, the larger the effectiveness value (P_a) for that storm becomes.

4. The FAFP is directly proportional to the effectiveness of atmospheric forcing mechanisms and inversely proportional to the effectiveness of orographic forcing mechanisms.

5. If the effectiveness of the orographic forcing mechanisms is of opposite sign to the effectiveness of the atmospheric forcing mechanisms and of equal or larger magnitude, little or no precipitation should occur.

6. The FAFP of storms of record is arbitrarily limited to no more than 100 percent of the maximum precipitation depth for the area/duration category under consideration.

7. Estimates of FAFP using the above assumptions are better at large rather than at intermediate or small area sizes.

7.3.1.5 Module 4. A basic assumption underlying the use of module 4 is that better results can be obtained by combining information; i.e., averaging the percentages obtained from the isohyetal analysis with the meteorological analysis and those obtained from analysis of the precipitation observations with the meteorological analysis. Better estimates are produced by averaging when there is little difference in the expressed preference for any one of the techniques or sources of information and, also, when the calculated percentage of FAFP from each of the modules exhibits wide differences.

Little is to be gained from use of the averaging technique over estimates produced by one of the individual analyses of modules 1, 2, or 3 when:

1. There are large differences in the expressed preference for the techniques of one module.

2. The sources of information for one of the individual modules is definitely superior.

3. The calculated percentages among the modules are in close agreement.

7.4 Methodology

The SSM was developed in a modular framework. This permits the user to consider only those factors for which information is available for an individual storm. A MAIN FLOWCHART of the SSM is shown in figure 7.2.

The MAIN FLOWCHART gives the user an overview of the SSM. Modules 1, 2, and 3 are designed to use the first three information sets mentioned in section 7.3 as indicated by the remarks column at the left side of the flowchart. A decision must be made initially for any storm and category as to which modules can be appropriately used, module 1, 2, or 3. The decision is based on a minimum level of acceptability of the information required by the module in question. The decisions are formalized for each of these three modules in module 0. The heart of the SSM procedure is module 5 where documentation is made of the SSM process, thereby permitting traceability of results. Though module 5 can be reached on the flowchart only after passing through each of the other modules, it is recommended that the steps in each module be documented in the record sheet of module 5 as the analyst proceeds. Transposition and moisture maximization of the index value of precipitation follows the completion of the SSM and will be discussed in chapter 8.

7.4.1 Module Flowcharts

There is a flowchart for each module. These were developed to aid the analyst in following the procedures in the SSM.

7.4.1.1 Module 0 Procedure (fig. 7.3). It is important in this module to decide on the adequacy of the available data. The results of this assessment are entered in column D of figure 7.8. The following rules concerning criteria are used:

1. For modules 1, 2, or 3, if there are no data available for the given technique (module), assign 0 to column D.

2. If the data are judged to be highly adequate, assign a value of either 7, 8, or 9, where 9 is the most adequate.

3. If the quantity, consistency, and accuracy of the information are judged to be adequate, assign a value of either 4, 5, or 6 to column D.

4. If the input information are judged as neither highly adequate, adequate, or missing, a value of either 1, 2, or 3 must be assigned to column D. A value of 1 is the lowest level of adequacy consistent with affirmative responses to questions 3, 5, and 7 in module 0.

An evaluation of a technique is not appropriate when there is insufficient information available for it to be used. Assigning an effective value of zero to column D under these circumstances eliminates the possibility.

The Glossary of Terms provides all required information needed to give numerical values to the five variables in the first step of the module 0 procedure. Note: In this module and in modules 1, 2, and 3, the connector symbol (C) applies only within the given module; i.e., when one is sent to a connector symbol it is always the one that is found in <u>that</u> module.

The following questions need to be answered in this module:

Q.1. Is PC equal to or greater than 0.95?

Q.2. Is there a MXVATS for an area size equal to or less than 100 mi^2 on the Pertinent Data Sheet for this storm?

Q.3. Are the quantity, quality, and distribution of the nonorographic observations sufficient to select a reliable value for RNOVAL?

Q.4. Is an isohyetal analysis available?

Q.5. Is the isohyetal analysis reliable?

Q.6. Is a reliable isohyetal analysis easily accomplished?

Q.7. Are the meteorological data sufficient to make a reliable estimate of P_a and A_o?

Q.8. Is RNOVAL equal to zero?

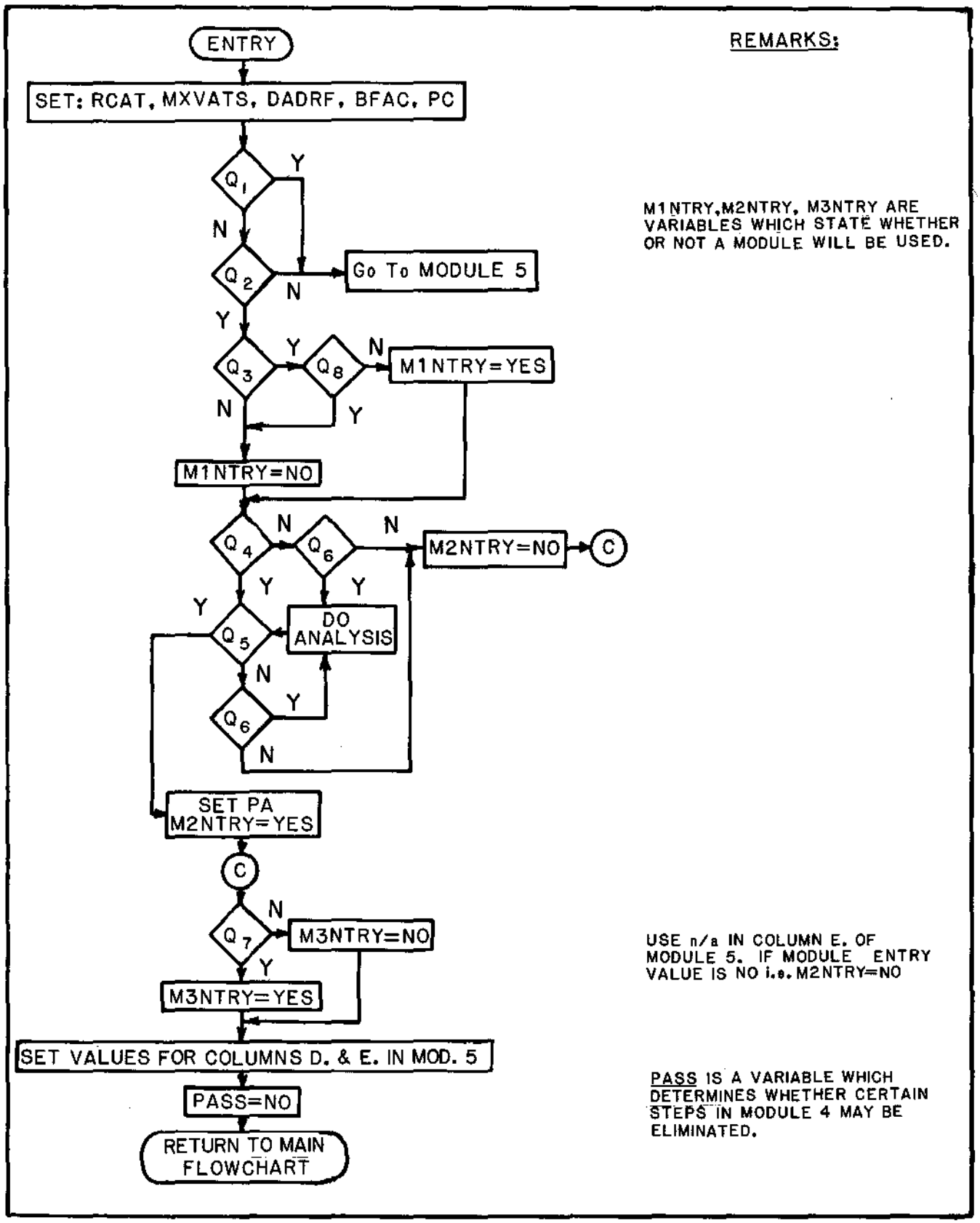

Figure 7.3.--Flowchart for module 0, SSM.

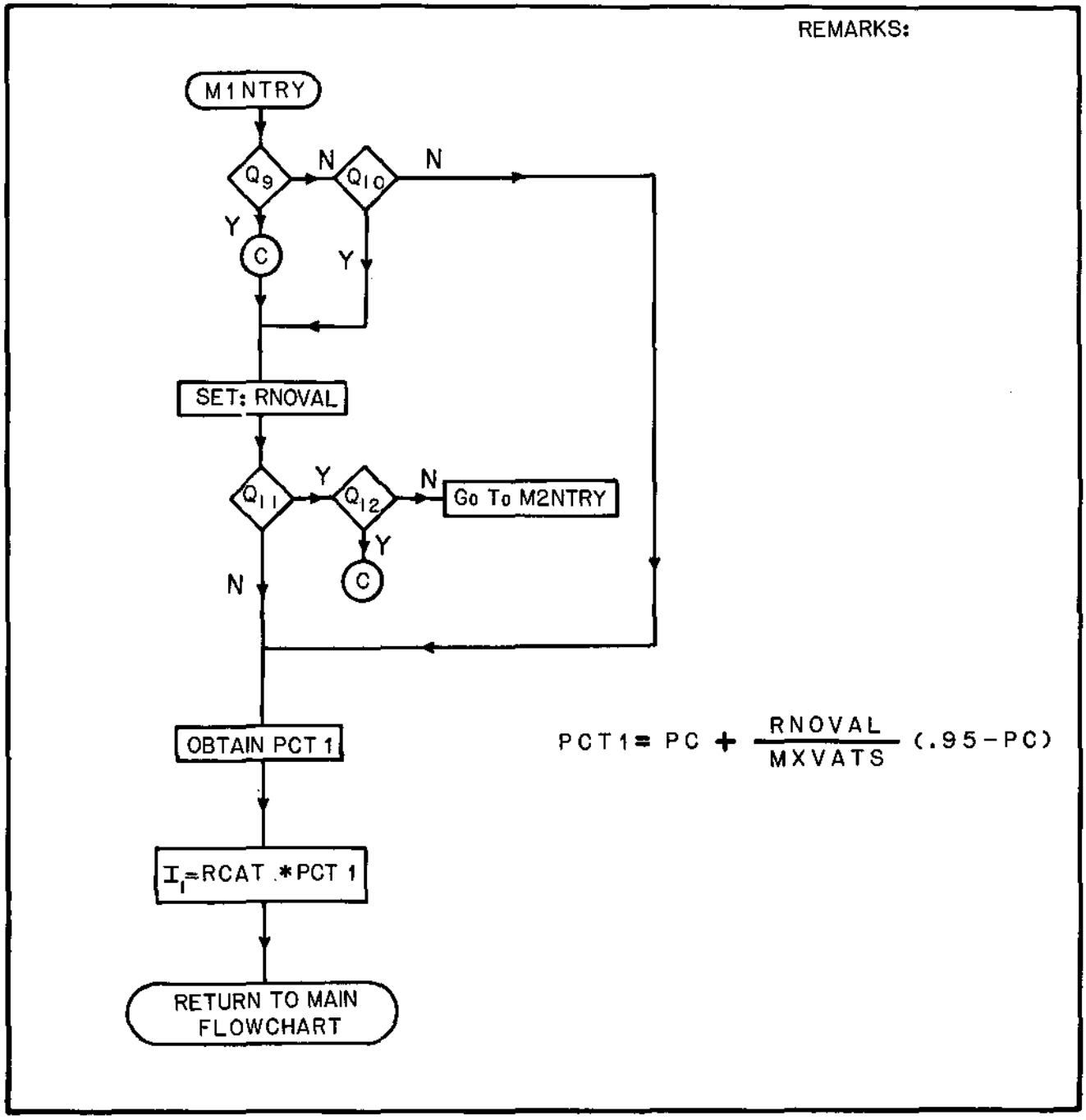

Figure 7.4.--Flowchart for module 1, SSM.

7.4.1.2 Module 1 Procedure (fig. 7.4). This module comes closer than any other in estimating a value for FAFP based on observed precipitation data. The key variables RNOVAL and MXVATS are based on direct observation, even though in some circumstances uncertainty surrounds the accuracy of these observations. The

actual values selected depend on the placement of the OSL (sec. 3.2.1) in the vicinity of the storm under consideration. Additionally, an analytical judgment must be made concerning the storm mechanism that resulted in MXVATS and RNOVAL. If there is more than one storm mechanism involved in the storm, the value selected for RNOVAL must result from the same mechanism that produced MXVATS.

The following questions are asked in module 1:

Q.9. Is this the first time in this module for this storm?

Q.10. Has the analyst just arrived here from module 4 to do a review?

Q.11. Is RNOVAL equal to MXVATS?

Q.12. Is a review of the data and assigned values for the variable needed?

If it is a good assumption that RNOVAL will usually be observed at a lower elevation than MXVATS, then there is a bias toward relatively large values for PCT1 in relation to the other percentages from the other modules, since total or cumulative precipitable water usually decreases with increasing elevation. The viability of PCT1 depends on the density of good precipitation observations on the date the storm occurred.

7.4.1.3 Module 2 Procedure (fig. 7.5). In this module, the average depth of precipitation for a given area-duration category is conceived of as a column of water composed of top and bottom sections (where the bottom section can contain from 0 to 95 percent of the total depth of water). The limit to the top of the bottom section is set by the parameter LOFAC. The bottom section is conceived to contain only a minimum level of FAFP for the storm. The top section contains precipitation that results from orographic forcing, and perhaps additional atmospheric forcing. The percent (if any) of the top section that results from atmospheric forcing is determined by the F-type and B-type correlations. The value computed for LOFAC is sensitive to the accuracy of the isohyetal analysis for the storm. This sensitivity must be taken into account when evaluating module 2 procedures in column E of module 5.

The procedure in which the precipitation is divided into two sections, is represented also in the expression for PCT22, which may be rewritten as:

$$PCT22 = PCT2\left(1 - \frac{LOFAC}{MXVATS}\right) + \frac{LOFAC}{MXVATS}$$

There are three terms on the right-hand side of the above equation. The rightmost of these terms is the minimum level of FAFP for the whole column expressed as a percent of the total and is the bottom section of the idealized column described above. The product of the first two terms on the right-hand side of the equation describes the top section of the idealized column, where PCT2 is the percent of the top section arising from atmospheric forcing and the second term is the depth of total precipitation minus the minimum level of FAFP expressed as a percent.

LOFACA is set to zero and LOFAC becomes zero when a good correlation cannot be found between any of the isohyets and the elevation contours upwind of the storm center. Zero is the numerical value that is appropriate for a minimum level of FAFP for the storm. Here it is assumed that the bottom section of the idealized

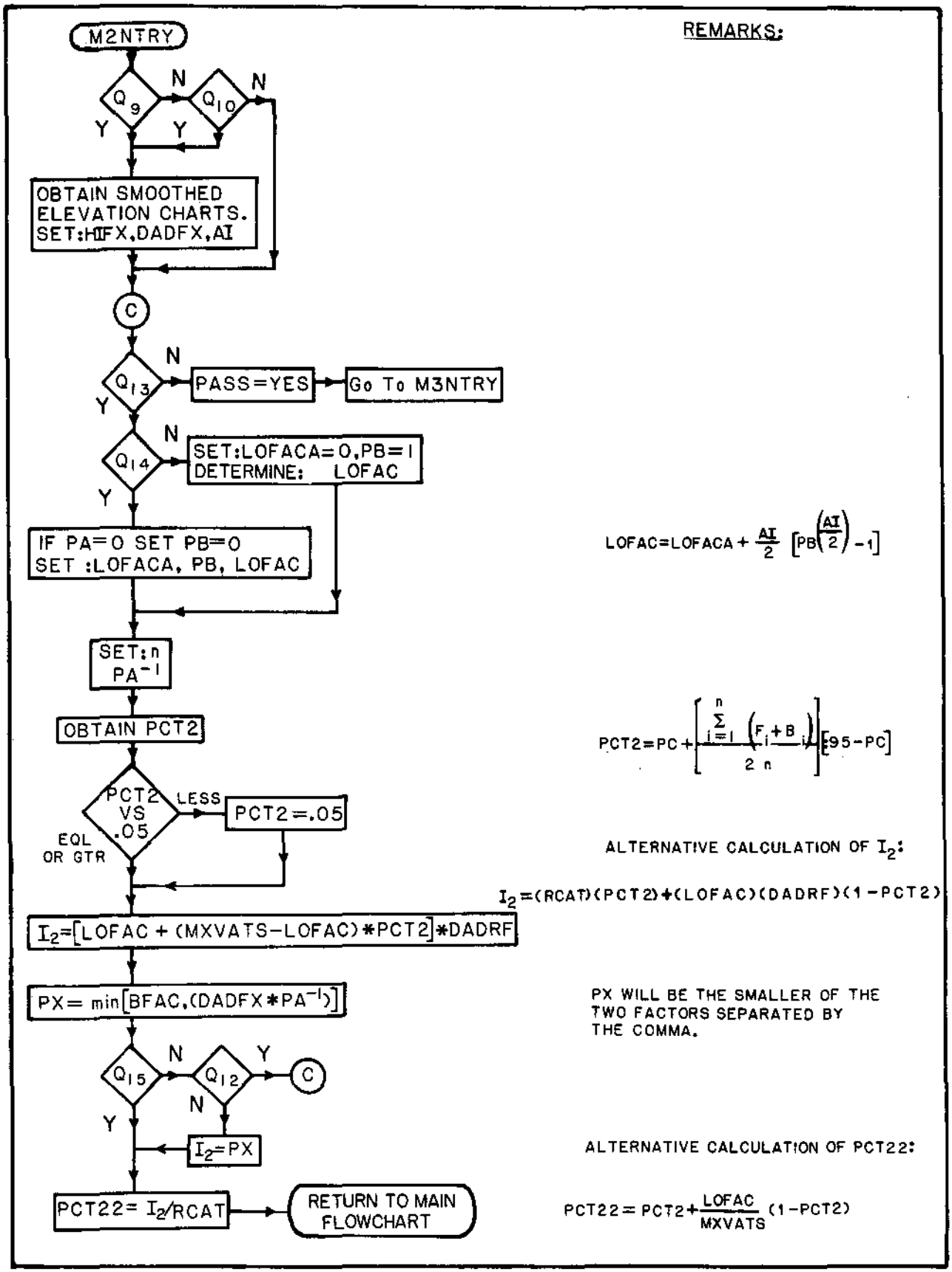

Figure 7.5.--Flowchart for module 2, SSM.

column is empty (minimum level of FAFP = 0), and both F-type and B-type correlations will determine the appropriate level of FAFP for the storm. The F and B correlations, to properly establish the appropriate FAFP, are determined nearby and upwind from the storm center.

As in module 1, an analytical judgment must be made on storm mechanism. In module 1, it was required that MXVATS and RNOVAL are the result of the same dynamic process. In module 2, it is necessary to determine that RNOVAL and HIFX are the result of the same atmospheric forces (storm mechanism).

The following questions are asked in module 2:

Q.9. Is this the first time in this module for this storm?

Q.10. Has the analyst just arrived here from module 4 to do a review?

Q.12. Is a review of the data and assigned values for the variable needed?

Q.13. Can it be determined which isohyetal maxima control(s) the average depth for the category selected?

Q.14. Is there good correlation between some isohyet and the elevation contours in the orographic part of the storm near the storm center?

Q.15. Is I_2 less than or equal to PX?

A feature of module 2 not to be overlooked is the consequence of a negative response to question 15 accompanied by a negative response to question 12. In this case an arbitrarily defined upper limit is set on PCT22 and I_2. The upper limit will be the smaller of two numbers. The selection of BFAC as one of these numbers is obvious when one considers that orographic forcing may be either positive or negative. The second factor is a consequence of the concept that the larger PA becomes, the more likely the second factor represents the true level of FAFP, since with a large value of PA the largest observed rainfall amount in the nonorographic portion is more likely to represent a true upper limit.

LOFAC is always a number equal to or slightly less than LOFACA. This is so because it is possible that the minimum level of FAFP is reached before the arbitrarily set analysis interval allows it to be "picked up." It is reasoned that the larger the area "occupied" by the LOFACA isohyet in the nonorographic part of the storm, the more likely that the analysis interval has "picked up" the described depth. When there is no nonorographic portion to the storm, the parameter PB, used to set a value for LOFAC, becomes undefined (see definition of PB). Consequently, in the module 2 FLOWCHART it must be determined whether a nonorographic portion of the storm exists when there is an affirmative response to question 14. If so, a reasonable value for PB is zero. The consequence of a negative response to question 14 is that LOFACA must be zero. Regardless of whether or not a nonorographic part of the storm exists, LOFAC must not be less than zero and this is ensured by setting PB equal to 1.

7.4.1.4 Module 3 Procedure (fig. 7.6). This module uses meteorological and terrain information to evaluate an appropriate level of FAFP. This is accomplished through evaluation of P_a and A_o.

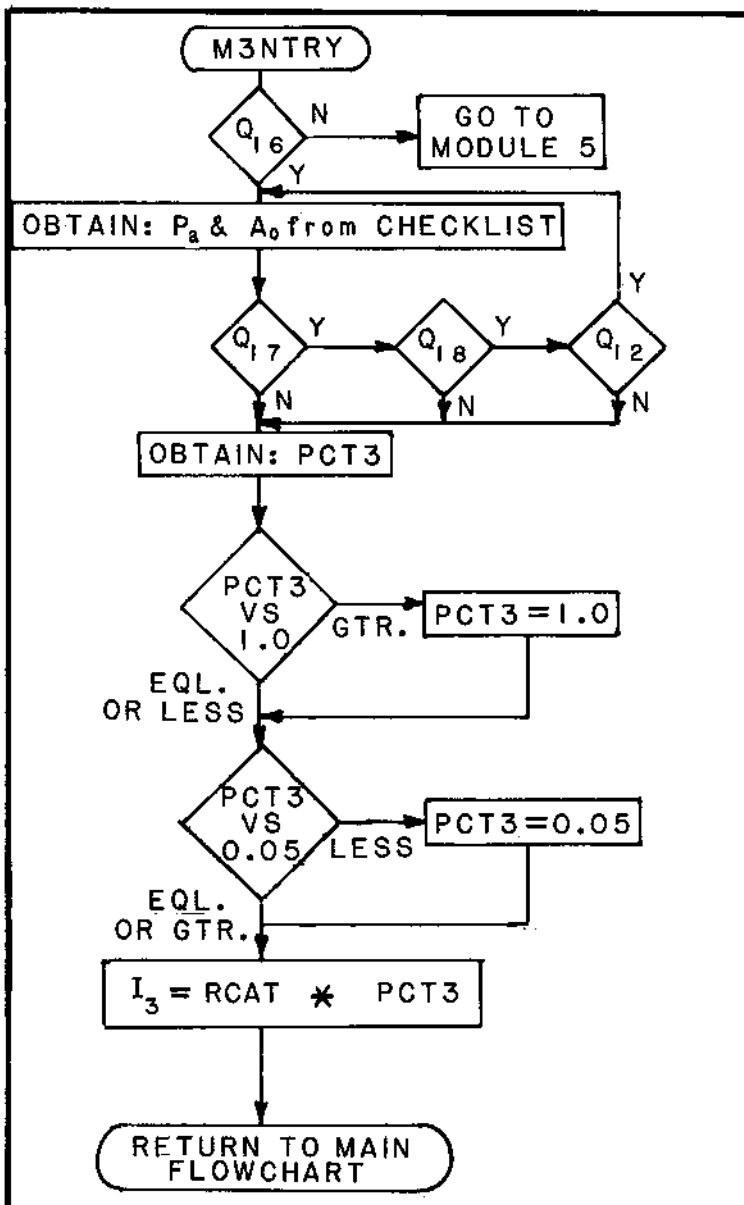

P_a CHECKLIST					
Cat. Data	Para-meter	A (✓)	B .05-.95	C 1-3	D B*C
Sur-face	Iso. Ptn. Fronts Waves Sq. Ln. Other				
Upper Air	PVA/SW Cutoff Block-ing Jet Stm Other				
Rawin-sonde	Sta-bility Shear Other				
Satel-lite	Diver. Merger MCC Other				
Radar	LEWP Merger Others				
Other					
Duration (%)					
Totals =					
P_a = Total D/Total C =					

A_o CHECKLIST				
Parameter	A Phys. Val.	B 0-±.95	C 1-3	D B*C
Inflow Direct				
Inflow Speed				
Gradient of Elevation				
Stability				
Other				
Duration (%)				
Totals =				
A_o = Total D/Total C =				

REMARKS

$$PCT3 = PC + \frac{P_a}{P_a + A_o}(.95 - PC)$$

LEGEND

PVA = Positive Vorticity Advection
MCC = Mesoscale Convective Complex
LEWP = Line Echo Wave Pattern

Figure 7.6.—Flowchart for module 3, SSM.

The following guidelines are provided to aid in the evaluation of P_a on the checklist given in the flowchart (fig. 7.6):

1. Use column A to indicate (by a checkmark) the presence of one or more features which infer positive vertical motion, or which may contribute toward an efficient storm structure.

2. Take as a basis for comparison an idealized storm which contains the same features or phenomena that were checked off in column A and indicate in column B, by selecting a number between 0.05 and 0.95, the degree to which the effectiveness of the selected actual storm features/phenomena (in producing precipitation) approaches the effectiveness of the same features/phenomena in the idealized storm. Where more than one feature/phenomenon is selected for a given category of meteorological information, it is the aggregate effectiveness which is considered and recorded in column B.

3. Repeat steps 1. and 2. for each category (surface, upper air,..., others) of meteorological data.

4. If the quantity and quality of the information permits, the degree of convective-scale forcing may be distinguished from forcing due to larger scale mechanisms. If convective-scale forcing predominates for some area/duration categories and larger scale forcing at others, then the value assigned in column B may vary by area/duration category; i.e., the same effectiveness value may be different for each category of a given storm.

5. In column C an opportunity is given to assign one category a greater influence on P_a in relation to the others by assigning weighted values. For each applicable category the value in column D is the product of columns B and C. P_a is obtained by dividing the total of column D by the total of column C.

6. Meteorological data categories, for which there is not sufficient information from a particular storm, are disregarded in P_a calculations for that storm.

7. When effectiveness changes with the selected duration, the resulting value in column B is weighted by duration; this process is to be distinguished from the weighting mentioned in (5) above.

A_o is a measure of the effectiveness of the orographic forcing effects. The following guidelines are used to aid in evaluating A_o:

1. Indicate in column A the value (in physical units) for the first five parameters. If any of these parameters change significantly during the duration category selected, indicate in the duration box the percent of time each of the values persists. To obtain the largest value in column B (largest effectiveness) observe the joint occurrence of tightly packed isobars (high wind speed) perpendicular to steep slopes for 100 percent of the duration category selected. Another way to look at this is to combine the first three parameters into a vertical displacement parameter, W_o, from the formula $W_o = V * S$, where V is the

component of the wind perpendicular to the slopes for the duration being considered in kt and S is the slope of the terrain in ft/mi. The effectiveness of W_o is then compared with an idealized value representing 100 percent effectiveness. The measured steepness of the slopes in the CD-103 region depends on the width across which the measurement is made. For a small distance (less than 5 mi.) a value of 0.25 is about the largest to be found, while for a large distance (greater than 80 mi.) a value of 0.06 is about the largest. A component of sustained wind normal to such slopes of 60 kt is assumed to be about the largest attainable in this region. Therefore, a W_o of 15 kt for small areas and of 3.5 kt for large areas are the values which would be considered highly effective.

None of the orographic storms studied occurred in places where the measured steepness of the slopes came near to the values just mentioned. Consequently, the vertical displacements observed for small areas were from .02 kt up to near 2 kt and proportionally smaller for the larger areas for these storms. Therefore, the effectiveness value used in the top box in column B was scaled to the values observed in the storms of record; i.e., a W_o of close to 2 kt was considered highly effective for small areas.

The inflow level for the storm is assumed to be the gradient wind level, and it is further assumed that the surface isobaric pattern gives a true reflection of that wind; i.e., the direction of the inflow wind is parallel to the surface isobars and its speed proportional to the spacing of the isobars as measured at the storm location. When rawinsonde observations are available in the immediate vicinity of the storm, they are used as the primary source of information for wind direction and speed.

When there is a sufficiently large number of wind observations, the average values of direction and speed are used for the duration considered. If the level of wind variability is large for the duration considered, the representativeness of the data is scored low in column C of module 5.

The fourth parameter, stability, must be considered in combination with the first three or W_o. Highly stable air can have a dampening effect on the height reached by initially strong vertical displacement (and consequently, the size to which cloud droplets can grow). In a highly unstable condition, vertical displacements of less than 2 kt can, through buoyancy, reach great height, thereby producing rainfall-sized droplets. The effectiveness value for stability is placed in the second box from the top in column B. Weighted values corresponding to the two top boxes of column B are placed in the two top boxes of column C to reflect the combined effects of W_o and stability; i.e., in the case where instability causes moderately weak displacements to grow, the stability "effectiveness" would be weighted strongly (given a 3) and the combined first three parameters weighted weakly (given a 1).

Entries in the other considerations box (for example, the shape of terrain features which may cause "fixing" of rainfall) need not be considered as dependent on the first four parameters.

2. The value for A_o is then obtained in the same manner as described in guideline 5 for P_a.

3. When evidence indicates that the orographic influence is negative; i.e., taking away from total possible precipitation, the values in column B are made negative and when the conditions are borderline between positive and negative, they are made zero. Negative orographic influence, when occurring in a storm where the atmospheric forcing approaches its conceptually optimum state, may cause some category values of PCT3 to exceed 1.0 resulting in FAFP larger than the total storm average depth for that category. The conventions of module 3, however, do not permit values of PCT3 to exceed 1.0.

4. The remarks section of module 5 should be used to document where the elevation gradients (ΔZ) were measured. For small areas, this would typically be at a point upwind of the largest report/isohyet. For larger areas, the average value from several locations may be used, or if one location is representative of the average value, it alone may be used. Sometimes the gradient is measured both upwind and downwind of the storm center (where inflow wind is used) if the vertical wind structure is such that a storm updraft initiated downwind may be carried back over the storm location by the winds aloft to contribute additional amounts to the "in place" amounts.

   The overriding importance of applying this module only to major storms cannot be overstressed. The consequence of "running through" a frequently observed set of conditions is that, by definition, the values for <u>both</u> P_a and A_o will have to be quite small. When both parameters are small (less than about .4) a sensitivity study (not included here) showed that small differences in the values assigned to P_a and A_o (the independent variables) would produce large differences in the value of the dependent variable (PCT3). However, it does not follow that the definition of P_a which permits a lower limit of zero is incorrect. A storm can reasonably be postulated in which the extreme amounts were traceable to exceptional orographic forcing and, thus, <u>both</u> terms would not be small (PCT3 in this case is 5 percent). Not only are "infinite" values for PCT3 removed by the FLOWCHART constraints, but a value of zero in the denominator of the ratio $P_a/(P_a + A_o)$ is a violation of the concept that if the orographic forcing negated the atmospheric forcing, no matter how large, little or no precipitation should occur.

   The "model" envisioned in module 3 (as distinguished from the "model" of module 2 just discussed) follows from the concept that FAFP is directly proportional to the effectiveness of atmospheric forcing and inversely proportional to the effectiveness of the orographic forcing mechanisms. The rate at which an imaginary cylinder fills up (whose cross-sectional area is the same as the area category being used) is directly proportional to the condensation rate producing the precipitation which falls into the cylinder. The paramount factor determining the condensation rate is the vertical component of the wind resulting from both atmospheric (P_a) and orographic (A_o) forcing.

The following questions are asked in this module:

Q.12. Is a review of the data and assigned values for the variable needed?

Q.16. Does there exist, or is there sufficient information available to construct, a map of where at least 1 in. of precipitation did or did not occur for this storm?

Q.17. Is A_0 less than zero?

Q.18. Is (are) the storm center(s) incorrectly located on the terrain map?

The remaining portions of the module 3 FLOWCHART, not discussed above, are simple and straightforward.

7.4.1.5 Module 4 Procedure (fig. 7.7). It is not contemplated that a computer program will be coded from the MAIN or MODULE FLOWCHARTS because the determination of the appropriate PCT's and I's is done easily manually. There is no real requirement for the variable PASS to be in the module 4 FLOWCHART. It is included only to make it obvious that the first part of the FLOWCHART should be skipped when returning to module 4 from a review of data in modules 1 and 3. The purpose of this module is simply to create two additional indices of FAFP on the assumption that an averaged value may be a better estimate than one produced in modules 1, 2, or 3.

A preliminary test of the SSM by six analysts each using six different storms showed that it was quite rare that one analyst would select a high (low) value for a PCT when other analysts were selecting low (high) values given that the interval range was the one shown in the right-hand remarks section of the module 4 FLOWCHART. Thus, a review is required of relevant information when an average percentage is to be created from individual percentages differing by two intervals.

PCT1 was not averaged with PCT2 because modules 1 and 2 conceive of the idealized column of precipitation representing the average depth for a given area-duration category in different ways; i.e., there is no minimum level of FAFP considered in module 1.

The following questions are asked in this module:

Q.12. Is a review of the data and assigned values for the variable needed?

Q.19. Is I_5 less than or equal to PX?

Those concepts of the module 4 FLOWCHART not discussed above are straightforward.

7.4.1.6 Module 5 Documentation (fig. 7.8). It should be noted again that even though the MAIN FLOWCHART shows that module 5 is not used until module 2 and/or module 4 have been completed, this was done only to keep the diagramming of the MAIN FLOWCHART and the MODULE FLOWCHARTS relatively uncluttered by variables not related to the task at hand. Even though documentation can await completion of module 2 and/or module 4, it is preferable to document the value assigned to a variable as soon as it is determined.

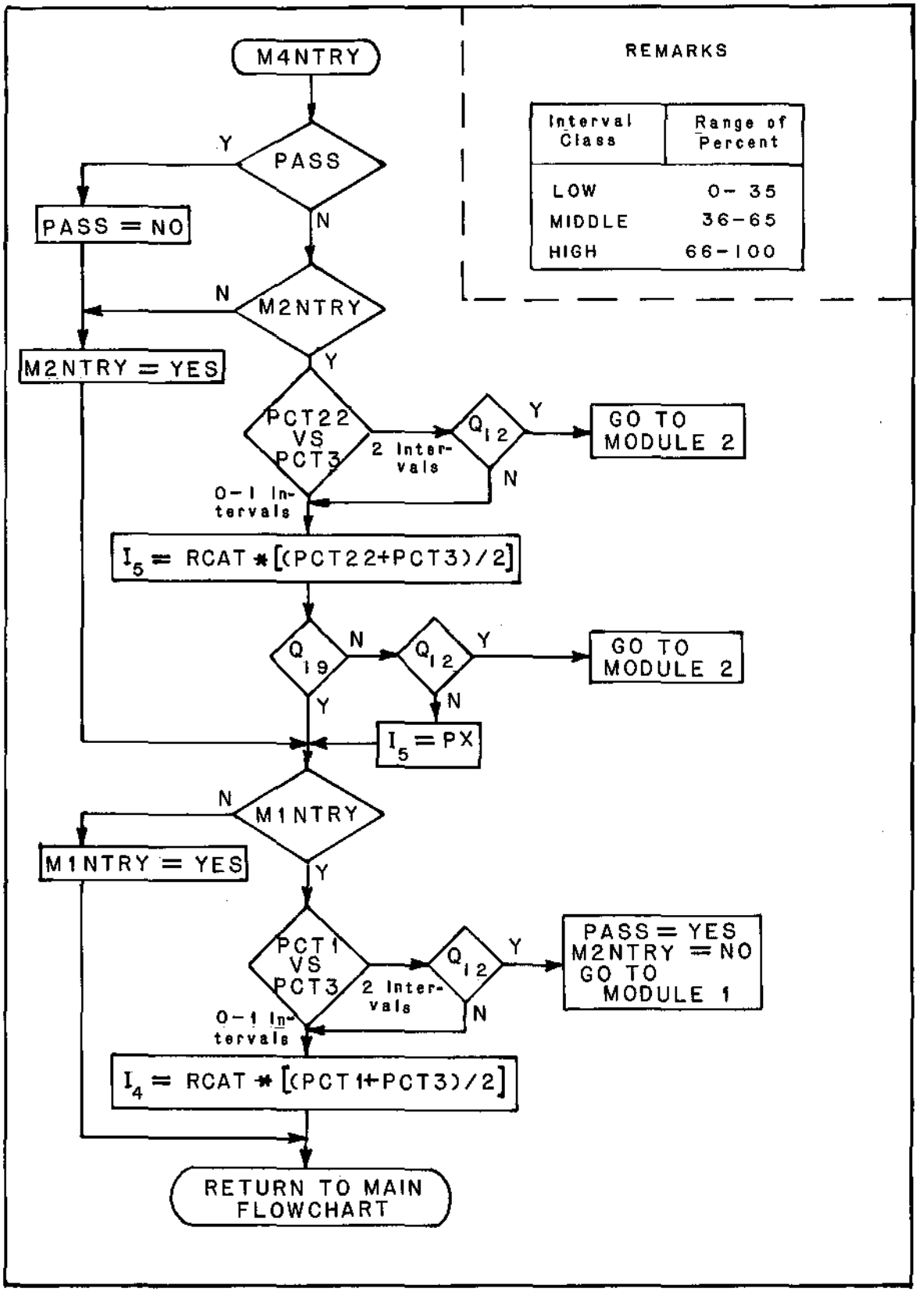

Figure 7.7.--Flowchart for module 4, SSM.

DOCUMENTATION AND INDEX SELECTION

STORM ID/DATE, REMARKS:

MODULE	PARAMETER	VALUE			EVALUATION SCALE: COL.D 0-9; COL.E 1-9 MODULES 1-3: COL.F: IS THE SUM OF COLS. D&E. COL.D: HOW ADEQUATE IS THE INPUT INFORMATION FOR THE REQUIREMENTS SET BY MODULE'S TECHNIQUE. COL.E: HOW LIKELY IT IS THAT THIS TECHNIQUE WILL ESTIMATE THE CORRECT INDEX VALUE BASED ON ITS ASSUMPTIONS? FOR MODULE 4 SEE SELECTION RULE. OVERALL RULE: SELECT INDEX VALUE WITH LARGEST COL. F SCORE. LARGEST SUBSCRIPT BREAKS TIES.			
					REMARKS	D	E	F
Ø	CATEGORY							
	RCAT							
	BFAC							
	MXVATS							
	DADRF							
	PA							
	PC							
1	RNOVAL							
	PCT1							
	I_1							
2	AI							
	LOFACA							
	PB							
	LOFAC							
	HIFX							
	DADFX							
	PA^{-1}							
	PX							
	$\sum(F_i+B_i)$							
	PCT2							
	I_2							
	PCT22							
3	COLUMN	A	B	C				
	INFLOW DIR.							
	INFLOW SPD.							
	GRAD. ELEV.							
	W_o							
	STABILITY							
	A_o							
	SURFACE							
	UPPER AIR							
	RAOB							
	SATELLITE							
	RADAR							
	P_a							
	PCT3							
	I_3							
4	(PCT22 + PCT3)/2							
	I_5							
	(PCT1 + PCT3)/2							
	I_4				RETURN TO MAIN FLOWCHART			

Figure 7.8.--Documentation form for SSM, module 5.

Values were assigned to column D during the review in module 0. This was necessary in the evaluation of the adequacy of data for application of modules 1, 2, and 3 to a particular storm. After completion of the first four modules, it is appropriate to review the values assigned for the adequacy of the data. In some cases, changes in values assigned to column D for some modules are appropriate. Any changes in values assigned in column D should be documented.

Assigning of values to columns E in module 5 involves subjectivity which must be the case because the "correct" value cannot be known and, hence, there is no way to know which of the various techniques used produces "correct" results most frequently. After the storm has been evaluated in each of the modules, all the information is available to assign a value for column E for modules 1 through 3. At this point, the value assigned to column E results from answering this question: For the type of storm selected and for the area/duration category chosen, what is the degree of confidence (i.e., how likely is it) that the particular technique (based on the validity of the assumptions underpinning it) will produce the "correct" result? The scheme for assigning values to column E is:

1. For modules 1, 2, and 3, if confidence is high, assign a value of either 7, 8, or 9 (9 being the highest of all) to column E.

2. If confidence is low, assign a value of either 1, 2, or 3 (where 1 is lowest, zero is not valid).

3. If the level of confidence is other than high or low, you must assign a value of either 4, 5, or 6.

4. If the entry value for the module under consideration is 0 in column D, an entry of n/a is made in column E and a value of zero used when calculating a column F.

5. It is unnecessary to evaluate columns D and E separately for module 4. Values to be assigned in column F for I_4 and I_5 can be determined from the following:

		Overall preference (difference in values assigned column F)		
		Little (0-2)	Some (3-5)	Strong ($\geq$ 6)
Level of agreement between modules (difference in index percentages)	Little ($\geq$ .31)	A	B	B
	Some (.16 - .30)	A	AB	B
	Large (0 - .15)	A	A	B

Where:

A = use the higher of the values from column F for I_4 or I_5.
B = use the lower of the values from column F for I_4 or I_5.
AB = use either the higher or the lower value from column F for I_4 or I_5.

Obviously, the scheme is designed to permit selection of I_1, I_2 or I_3 when there is a strong preference for one of them and to select I_4 or I_5 when there is little overall preference. In the case where there is some preference for a given module and some agreement between the index values generated therefrom, the analyst must make a decision as to which index is to be preferred. The range of values used to represent index agreement categories was based on values actually selected in a test involving six different analysts working with six different storms.

The final value selected for FAFP is determined by the largest value in column F. If the same value has been computed for more than one index value, the index with the largest subscript is selected (I_2 over I_1, I_3 over I_2).

7.5 Example of Application of SSM

One of the most critical storms for determining the PMP in the CD-103 region occurred at Gibson Dam, MT on June 6-8, 1964 (75). Figure 7.9 shows the completed module 5 worksheet for this storm for the 24-hr 10-mi^2 precipitation. The final percentage selected for this storm was 61 percent for PCT5. This gave an FAFP of 9.1 in.

7.6 Application of SSM to this Study

The SSM was used in this study to estimate FAFP for just one category, 10 mi^2 and 24 hr. This category was selected as the key (index) category for this study for several reasons. The first reason relates to area size. In determination of the effects of orography on precipitation, it is easiest to isolate these effects for the smaller areas. In addition, if larger area sizes were used, the determination of the orographic effects for computation of the final PMP values would have been very complicated. At some transposed location, the increase in precipitation as a result of orographic effects for a very small area can be determined with little ambiguity. If a larger area (e.g., 1,000 mi^2) was used, the effect of terrain at a transposed location would be related directly to the shape and orientation of the 1,000-mi^2 area selected. This factor, therefore, indicated use of the 10-mi^2 area as most appropriate.

The 24-hr duration was selected because of the reliability of data for this duration. For storms before 1940, the amount of recording raingage information is relatively sparse. Determination of amounts for durations less than 24 hr for these storms is based on only limited data. This indicates use of a storm duration of 24 hr or longer. A review of the important storms in this region shows several that did not last the entire 72-hr time period of interest in the present study. Most notable of these are the Gibson Dam, MT storm (75) and the Cherry Creek (47), Hale (101), CO storms. These two factors made selection of the 24-hr duration most appropriate. Selection of this duration also had the advantage of minimizing the extrapolation required to develop PMP estimates for the range of durations required in the study.

DOCUMENTATION AND INDEX SELECTION

STORM ID/DATE, REMARKS: Gibson Dam, MT (75) 6/6-8/64

MODULE	PARAMETER	VALUE	EVALUATION SCALE: COL.D 0-9; COL.E 1-9 MODULES 1-3: COL.F: IS THE SUM OF COLS. D&E. COL.D: HOW ADEQUATE IS THE INPUT INFORMATION FOR THE REQUIREMENTS SET BY MODULE'S TECHNIQUE. COL.E: HOW LIKELY IT IS THAT THIS TECHNIQUE WILL ESTIMATE THE CORRECT INDEX VALUE BASED ON ITS ASSUMPTIONS? FOR MODULE 4 SEE SELECTION RULE. OVERALL RULE: SELECT INDEX VALUE WITH LARGEST COL. F SCORE. LARGEST SUBSCRIPT BREAKS TIES.			
			REMARKS	D	E	F
Ø	CATEGORY	10mi²/24 hr				
	RCAT	14.9				
	BFAC	14.2				
	MXVATS	16.4				
	DADRF	.91				
	PA	.40				
	PC	0				
1	RNOVAL	7.5				
	PCT1	.43				
	I_1	6.4		7	7	14
2	AI	1.0				
	LOFACA	6.0				
	PB	.1				
	LOFAC	5.7				
	HIFX	6.0				
	DADFX	5.5				
	PA^{-1}	2.5				
	PX	13.7		7	6	13
	n	1				
	$\sum(F_i+B_i)$	.8 + .4 = 1.2				
	PCT2	.57				
	I_2	10.7				
	PCT22	.72				
3	COLUMN	A / B / C	ma = moist adiabatic saturated na = not applicable Grad. Elev measured upwind of isohyetal max between 6000 and 7000 ft			
	INFLOW DIR.	080				
	INFLOW SPD.	23ms⁻¹				
	GRAD. ELEV.	.045 / .8 / 1				
	W_o	1.0				
	STABILITY	ma / .6 / 1				
	A_o	.7		8	7	15
	SURFACE	.7 / 1				
	UPPER AIR	.85 / 2				
	RAOB	.6 / 1				
	SATELLITE	na				
	RADAR	na				
	P_a	.75				
	PCT3	.49				
	I_3	7.3				
4	(PCT22 + PCT3)/2	.61				
	I_5	9.1				15
	(PCT1 + PCT3)/2	.46				
	I_4	6.9	RETURN TO MAIN FLOWCHART			15

Figure 7.9.--Completed module 5 documentation form for Gibson Dam, MT storm (75) of June 6-8, 1964.