SYSTEM TEST PLAN

for the
Automated Surface Observing System
(ASOS)
Ceilometer Replacement (CL31)

Addendum
Meteorological Comparison Evaluation Plan
(Between CT12K and CL31 Ceilometers)

September 2008

U.S. DEPARTMENT OF COMMERCE
National Oceanic and Atmospheric Administration
National Weather Service/Office of Systems Operations
Field Systems Operations Center/Test and Evaluation Branch

Table of Contents

Page

Acronyms iv

PART I

1.0 Introduction 1
2.0 Purpose 3
3.0 Test Plan Organization 3
4.0 Test Assumption and Limitations 4
5.0 Test Objectives and Evaluation Criteria 5
6.0 Test Management 5
6.1 Test Review Group (TRG) 6
6.2 Test Result Analysis 7
7.0 Prerequisites 9

PART II

1.0 Method of Accomplishment 11
2.0 Schedule 11
3.0 Test Facilities 12
3.1 SFSC 12
3.2 WSH 17
3.3 SPAWARSYSCEN 18
3.4 NWSTC 19
3.5 FAATC 20
3.6 AOS Second-Level Engineering Support Center 21
4.0 Resources 21
4.1 Hardware/Software 21
4.2 Documentation 22
4.3 Personnel 23
5.0 Test Methodology 24
5.1 Pre-ST Activities 25
5.2 Installation 25
5.3 Test Conduct 25
5.4 System Stability Test 26
5.5 Regression Tests 27
5.6 Real-Time Monitoring of Observations 27
5.7 Review of Observations 27
5.8 Review SYSLOG Messages 27
5.9 Problem Reporting (TestTrackPro) 28

PART III

1.0 Post-ST Activities 28
2.0 Test Recommendations and Report 28

Tables

Table 1 - Test Review Group 6
Table 2 - Test Schedule 11
Table 3 - Test and Technical Support Personnel 24
Table 4 - Test Setup 26

Figures

Figure 1 - Vaisala Model CL31 1
Figure 2 - CL31 beside CT12K 2
Figure 3 - CL31 beside CT12K with cover 2
Figure 4 - Bird Abatement Device 3
Figure 5 - Temporary CL31 Installation Diagram 10
Figure 6 - ST0 ASOS Configuration 13
Figure 7 - ST0 DCP#1 14
Figure 8 - ST0 DCP#2 15
Figure 9 - ST0 DCP#3 16
Figure 10 - ST1 ASOS Configuration 17
Figure 11 - SCA ASOS Configuration 18
Figure 12 - Navy 1 (Gold) ASOS Configuration 19
Figure 13 - NWSTC Single Cabinet ASOS (SCA) Configuration 20

Attachments

Attachment 1 - ASOS Ceilometer Replacement Regression Tests Checklist 29
Attachment 2 - ASOS Test Trouble Report Form 31
Attachment 3 - Test Logs 32

Addendum

Meteorological Comparison Evaluation Plan
(between the CT12K and CL31 Ceilometers)

Acronyms

ACCB	ASOS Configuration Control Board
ACE	ASOS Controller Equipment
ACU	Acquisition Control Unit
ADAS	AWOS Data Acquisition System
ALDARS	Automated Lightning Detection and Reporting System
AMR	ASOS Meteorological Report
AOMC	ASOS Operations and Monitoring Center
APMC	ASOS Program Management Committee
ASENSE	ASOS Sensor Emulation Software
ASOS	Automated Surface Observing System
ATC	Air Traffic Controller
ATIS	Automatic Terminal Information Service

ATRB	ASOS Test Review Board
AWIPS	Advanced Weather Interactive Processing System
AWOS	Automated Weather Observing System
BKN	Broken
CLI	Climate Report
CL31	Vaisala Replacement Ceilometer
CLR	Clear
COR	Corrected
CRH	Central Region Headquarters
CT12K	Current Operational Ceilometer
DCA	Washington National Airport, ASOS Site
DCP	Data Collection Platform
DCM	Direct Command Mode
DOD	Department of Defense
DS	Daily Summary
DSM	Daily Summary Message
ECP	Engineering Change Proposal
El Tech	Electronics Technician
EPROM	Erasable Programmable Read-Only Memory
FAA	Federal Aviation Administration
FAATC	FAA Technical Center
FAT	Factory Acceptance Test
FMH-1	Federal Meteorological Handbook # 1
FSOC	Field Systems Operations Center
FZRANO	Freezing Rain Not Available
GENOB	Generate Observation
ICD	Interface Control Document
LDAD	Local Data Acquisition and Dissemination
LEDWI	Light Emitting Diode Weather Identifier
LST	Local Standard Time
METAR	Meteorological Aviation Routine Weather Report
MS	Monthly Summary
MSM	Monthly Summary Message
NCDC	National Climatic Data Center
NGRVR	Next Generation Runway Visual Range
NLSC	NOAA Logistics Support Center
NMTW	National Meteorological Test Weather
NP	No Precipitation
NRC	National Reconditioning Center
NWS	National Weather Service
NWSTC	National Weather Service Training Center
OBS	Observer
OCCWS	Office of Climate, Water, and Weather Services
OH	Office of Hydrology
OID	Operator Interface Device
OOS	Office of Operational Systems
OS&T	Office of Science & Technology
OT&E	Operational Test and Evaluation
OTR	Operations Trouble Report

OVC	Overcast
PHYS	Physical
PNO	Precipitation Not Available
PWINO	Precipitation Identifier Information Not Available
PWX	Present Weather
RC	Request for Change
RVR	Runway Visual Range
RVRNO	Runway Visual Range Not Available
SAT	System Acceptance Test
SCA	Single-Cabinet ASOS
SCD	Supplemental Climatological Data
SCT	Scattered
SFSC	Sterling Field Support Center
SHEF	Standard Hydrometeorological Exchange Format
SP1	Silver Spring, MD, ASOS system
SPECI	Aviation Selected Special Weather Reports
SFSC	Sterling Field Support Center
SSMC2	Silver Spring Metro Center Bldg. 2
ST	System Test
ST0	SFSC ASOS Test System 2
ST1	SFSC ASOS Test System 3
TRG	Test Review Group
TSNO	Thunderstorm Not Available
TTR	Test Trouble Report
USP	Urgent Special Observation
UTC	Universal Time Coordinated
V	Version
VDU	Video Display Unit
WSH	National Weather Service Headquarters
WSP	Weather Systems Processor

PART 1

1.0 Introduction

The National Weather Headquarters (WSH) Office of Operational Systems (OOS), Field Systems Operations Center (FSOC), Test and Evaluation Branch (OPS24) will conduct a System Test (ST) of the proposed replacement ceilometer (CL31) for the current operational ceilometer (CT12K) sensor on the Automated Surface Observation System (ASOS). The CT12K transmits the cloud ceiling and coverage to ASOS for input into the hourly (METAR) and special (SPECI) surface observations officially used to support the aviation weather program. The ASOS Acquisition Control Unit (ACU) software version (V) 2.79S and the Data Collection Platform (DCP) Erasable Programmable Read-Only Memory (EPROM) V2.0 were developed to support the new CL31 sensor and will be tested in conjunction with this new sensor. Although the Vaisala model CL31 ceilometer is designed to detect clouds up to 25,000 ft., the "sensor under test" specifications will be the same as the existing CT12K ceilometer and, therefore, will be operationally deployed to detect clouds up to 12, 000 ft.

The CL31 Cloud Height Indicator, Figures 1, uses single lens technology to detect cloud bases. The single lens is shared by both the transmitting and receiving units. The transmitter is an Indium Gallium Arsenide pulsed laser diode, operating at a wavelength of 910nm (±10nm). The receiving unit is a Silicon Avalanche photodiode with an interference filter typically centered on 915nm. The sensor is equipped with a heater/blower device to keep the window clear of obstructions.
The following are pictures showing the existing CT12K ceilometer next to the proposed CL31 ceilometer:

Figure 1: Vaisala Model CL31

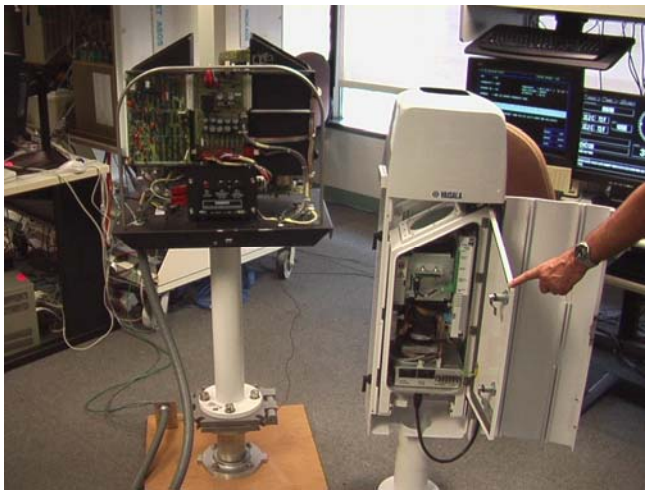

Figure 2: CL31 beside CT12K

Figure 3: CL31 beside CT12K with Cover

The new CL31 ceilometer will also come equipped with a bird abatement device attached to the top of the exterior cover of the unit. Below is a picture depicting the device on the CL31.

Figure 4: Bird Abatement Device

The ST is the first test of the operational testing phase of the CL31 that OOS FSOC will oversee. The Office of Science and Technology (OS&T) Program Branch (OST11) was responsible for the

development test phase of the proposed new ceilometer. As a final test prior to transferring testing responsibility to OOS, a System Integration Test (SIT) was performed by OS&T and witnessed by representatives from NWS OOS, Department of Transportation Federal Aviation Administration (FAA), the Department of Defense (DOD) U.S. Air Force and the U.S. Navy. The SIT interfaces the proposed new ceilometer to several ASOS test systems representing different configurations using ASOS ACU V2.79S test software. The purpose of the SIT is to validate the new sensor can successfully input cloud height and amount data into ASOS; and, ASOS can generate a METAR and/or SPECI observation with valid cloud height and amount parameters without negatively affecting the ASOS. The ASOS Test Review Board (ATRB) will review both the CL31 Specification Compliance Report and the SIT report provided by OS&T and decide if the CL31 is ready for the next phase of testing, ST. A successful ST is a prerequisite to the Operational Test & Evaluation (OT&E). The OT&E will test the new CL31 at a limited number of operational ASOSs. A successful OT&E will be the final test leading to a decision to nationally deploy the CL31 as the operational replacement to the CT12K.

2.0 Purpose

The ST will validate the proposed CL31 as a replacement for the operational CT12K sensor in a simulated operational environment using test ASOS systems prior to conducting the field test of the new sensor at operational ASOS locations (i.e., OT&E).

3.0 Test Plan Organization

This document comprises two test plans:

1) The ST plan encompasses the standard validation test of the draft NWS Engineering Modification Note #92 used to install the CL31 sensor with V2.79S and draft NWS Engineering Modification Note #80 used to install the ASOS ACU firmware V2.79S and V2.0 EPROM for the DCP; Validation that the test sensor and ASOS ACU software do not negatively affect ASOS operational systems; and, verification that the communication interfaces between NWS/FAA operational systems and ASOS are not compromised.

2) As an addendum, another plan describes a meteorological comparison evaluation which will be performed between the current operational CT12K and the proposed CL31 ceilometers interfaced to an ASOS. The purpose of this plan is to validate that the two sensors produce comparable cloud height and ceiling data assuming the sensors are within close proximity of each other. The evaluation is not meant to be an extensive comparison test but, rather a “confidence building” evaluation that the two sensors will produce reasonably similar data output when interfaced ASOS. Also, any statistically significant differences found during this evaluation will be conveyed to the user community as part of the Technical Implementation Note.

The meteorological comparison evaluation will be conducted concurrent with the ST, but may extend into the OT&E.

The test schedule, methodology and management, personnel, system resources, and materials needed to conduct the activities denoted in Item 1 above are described in this ST plan. Please see separate CT12K and CL31 Ceilometers Meteorological Comparison Evaluation Plan for Item 2 above.

The ST plan is divided into three parts:

Part I contains introductory material on test strategy, objectives, result analysis, and prerequisites.

Part II describes the schedule and methodology for conducting the ST, test facilities, pre- and post-test activities, and supporting documentations. This section also contains information on personnel and their responsibilities.

Part III discusses the post-ST activities.

The ST plan also contains three attachments that will be used as test materials during the ST:

Attachment 1 lists the regression test procedures to be performed.

Attachment 2 is the Test Trouble Report (TTR) form.

Attachment 3 is the Test logs form.

4.0 Test Assumption and Limitations

The Vaisala CL31 ceilometer is a replacement for the existing CT12K ceilometer and will not affect the ACU internal algorithms. Although a specification compliance test was performed on the new sensor, a meteorological comparison evaluation will be performed with both ceilometers interfaced to ASOS to compare the cloud height and amount output from the ASOS 5-minute observations (i.e., data source for the primary sensor) and the 12-hour archive page (i.e., data source for the test sensor) to determine if there are significant differences. Again, this evaluation will be conducted as a "confidence building" measure and is not intended to be a detailed test. The ASOS Test Review Board (ATRB) will oversee the management of this meteorological comparison evaluation and will determine when the evaluation should be terminated. The evaluation will be conduct in parallel to both the ST and could be expanded into the OT&E by decision of the ATRB. The SFSC ASOS test system ST1 will be dedicated to the meteorological comparison evaluation. The SFSC ASOS test system STO will be used to perform all tests related to the ST at the SFSC test site.

A SIT was successfully conducted on the CL31 sensor, interfaced to the ACU using V2.79S software, and configured both as an official and test sensor. Four problems were documented during the SIT. Three of the problems are related to deficiencies in the ASOS ACU test firmware V2.79S. However, after investigation, the problems exist in previous operational versions of the ASOS software. Therefore, the problems are designated as Operational Trouble Reports and will be processed through the ASOS Configuration Control Board (ACCB). One of these 3 problems was deemed "critical." However, the problem is not repeatable and will be carried as a "Watch Item." An operational workaround does exist when the problem has occurred operationally. The fourth

problem found can be solved with procedural workaround. These problems are documented in the SIT report and will be noted if they occur during the ST.

The ST is limited to: 1) Verify the efficacy of the ASOS software V2.79S on test ASOS systems using the latest weather sensors configured as in the field; 2) Ensure the ASOS system stability is maintained and the existing ASOS functions are not negatively affected by the new changes; and, 3) Verify the communication interfaces to operational systems connected to ASOS.

An ST Readiness Review meeting will be convened for the ATRB to review the sensor specification compliance report, the SIT report, as well as the ST and Meteorological Comparison Evaluation Plans. The ATRB must authorize the start of the ST.

5.0 Test Objectives and Evaluation Criteria

The specific test objectives and criteria are:

A. Verify the draft NWS Engineering Modification Note #92 for installing the CL31 sensor and draft NWS Engineering Modification Note #80 for installation of ASOS ACU firmware V2.79S and DCP EPROM V2.0.

Evaluation Criterion: The Engineering Mod Note is complete and accurate.

B. Verify ASOS system is stable.

Evaluation Criterion: The ASOS system is stable and does not experience any ACU or DCP lockup as a result of using the CL31 sensor. The system logs for ASOS test systems will be monitored to show no significant increase in error messages.

C. Verify all existing ASOS functions are available.

Evaluation Criterion: The ASOS system must pass all regression tests without any critical problem. (See Attachment 1 and Part I, Section 6.2)

D. Verify the ASOS system communication interfaces work correctly.

Evaluation Criterion: All ASOS products are received in a timely manner. The users will determine if the criteria are met.

6.0 Test Management

The following sections describe the structure used to manage the ST including the test roles and responsibilities.

6.1 Test Review Group (TRG)

The TRG will comprise technical experts assigned from each agency. The role of the TRG is to evaluate each observed deficiency as documented by a Test Trouble Report (TTR) during the ST and to manage the conduct of the ST.

During the ST, the TRG Chair will convene the TRG weekly to:

a) Review, clarify, and evaluate deficiencies documented in the TTRs;

b) Prioritize, validate deficiencies, and recommend corrective actions to the ASOS Software Manager or ASOS CL31 Project Manager as appropriate.

c) Coordinate the resolution of other test-related issues.

If a "critical" problem (See Part I, section 6.2) occurs between weekly meetings and requires a vote of the members whether to suspend the ST, the ST Director shall convene an emergency TRG meeting. The TRG will ensure fixes to any "critical" problems are validated in a follow-on ST.

The TRG will be composed of the personnel identified in Table 1. The "voting" members will forward a recommendation through the Chair, TRG to the Chair, ATRB, whether the CL31 sensor and the ASOS V2.79S software are ready for OT&E.

Table 1 – ASOS Test Review Group

Name	Function	Telephone
Jerald Dinges (OPS24)	Chair, Voting	301-713-0326 x160
Khien Nguyen (OPS24)	System Test Director/ Alternate Chair/ Secretariat	301-713-0326 x177
Richard Parry (OPS22)/ Chet Schmitt (Alternate)	Voting	301-713-2093 x 109
Greg Dalyai (OPS12)/ Greg Sikora (Alternate)	Voting	301-713-1833 x 147
Laura Cook (OS7)/ Jim Hail (alternate)	Voting	301-713-1792 x 126
Bing Huang (FAA/ ATO-T)	Voting	202-385-8579
Tuyen Kieu (FAA/ATO-W)	Voting	202-267-9435
Bob Born (USAF)/ Todd Allen (alternate)	Voting	402-294-0866
Wayne Knight (U.S. Navy)/ Ron Heatherdale (alternate)	Voting	843-218-4818
Dan Lester (W/CR4) (NWS Regional Rep)	Voting	816-540-5147 x 381
John Monte (OST11)	Voting	301-713-1975 x 160
Kevin Conaty (OCIO12)	Voting	301-713-0864 x 170

The following describes the major roles and responsibilities of the TRG personnel:

TRG Chair – The TRG Chair convenes the meetings of the TRG and works with the ST Director and the members of the TRG to ensure that tests are conducted efficiently. The Chair works to resolve any issues that may arise during the conduct of the ST.

System Test Director – The test director is the primary point of contact for the ST. The test director manages the development and coordination of the ST Plan, oversees the conduct of the tests, and manages the development and coordination of the ST Report to document the test results and recommendations. As a voting member, the ST Director solicits inputs from the ASOS test team for any issues which require a decision among the voting members.

ASOS Software Manager – The ASOS Software Manager is responsible for providing technical support and information as required when ASOS questions arise, and schedules investigation and solution of ASOS discrepancies.

ASOS CL31 Project Manager – The ASOS CL31 Project Manager provides overall program management oversight and program support during the ST.

ASOS Test Team – The ASOS test Team is comprised of subject experts from the National Weather Service Headquarters (WSH), NWS Training Center, NWS National Reconditioning Center, and designated DOT/FAA and DOD personnel representing test sites. The ASOS test Team installs the CL31 Ceilometers, V2.79S ACU software, and conducts the ST.

6.2 Test Result Analysis

On Thursday of each test week, all Test Trouble Reports (TTR) will be collected and the Test Review Group (TRG) will meet to classify the problems. The TRG is a group of subject-matter experts and is chaired by the Chief, Test and Evaluation Branch (OPS24) or his designee. The TTRs may be assigned numerical scores to indicate the severity of the defect, (i.e. the Impact, and the Priority). A 5-point grading system is typically used with “1” being the most severe and “5” being the least severe.

A typical assignment scheme for Impact follows:

1. Critical Deficiency – A repeatable problem, with no workaround, that prevents or may compromise the full delivery of products or services.

   ACTION: The TRG will recommend the immediate suspension of ST, and the software will be turned over to the developer to resolve the problem. The ST may be resumed at the recommendation of the TRG after an appropriate fix or workaround has been developed. The Test Team may develop new Test Case Procedures and/or repeat selected Test Case Procedures to fully evaluate the proposed solutions.

2. Urgent Deficiency - A repeatable problem, with an acceptable workaround, that prevents or may compromise the full delivery of products or services.

ACTION: The TRG may recommend the ST continue with an approved workaround in place until an appropriate fix is developed. If a fix becomes available during the ST, the TRG may recommend the immediate implementation of the fix. The Test Team may develop new Test Case Procedures and/or repeat selected Test Case procedures to fully evaluate the fix.

3. Routine – A repeatable problem that does not prevent or compromise the full delivery of products and services.

   ACTION: The ST may continue at the discretion of the TRG. An approved workaround may be authorized until the problem is fixed, but this is not mandatory. Routine deficiencies are documented and prioritized by the proper authority for future fixes.

4. Watch Item – Infrequent or poorly documented behavior of the System-Under-Test that might prevent or compromise the delivery of products or services.

   ACTION: The TRG may recommend that the ST continue. The Test Team may develop new Test Case Procedures and/or repeat selected Test Case Procedures in and attempt to reproduce the problem. Any further observations are documented and submitted to the TRG for review.

5. Potential Enhancement – An item identified by the TRG for consideration as a new system requirement.

   ACTION: The TRG forwards the recommended change to the System Program Manager for consideration under the Configuration Management process.

The Priority addresses how the problem is to be solved. Each problem will have an assigned "priority" for fixing. A typical assignment scheme for the "Priority" follows:

- Priority 1 – Urgent: Immediate emergency action is required.

  ACTION: All appropriate resources are directed to resolve the problem as soon as possible.

- Priority 2 – High: Include in the next interim release.

  ACTION: The available resources are directed to resolve the problem.

- Priority 3 – Routine: Include in a future interim release.

  ACTION: Resources are directed to resolve the problem as allowed.

- Priority 4 – Low: Consider for the next major release.

  ACTION: The item is deferred to future system improvements.

- Priority 5 – Undetermined: The Priority has not yet been assigned.

  ACTION: None.

<u>No recommendation will be made to proceed to the OT&E if any critical Impact 1 and urgent Priority 1 deficiency remains open.</u>

7.0 Prerequisites

The following are specific items required to commence the ST:

a) An ST Readiness Review is conducted with the ATRB for its approval to proceed with the ST. The ATRB must approve the following reports with no critical deficiencies noted and completed its review of the ST Plan as part of the document's signature coordination:

- ASOS ACU V2.79S FAT Report.
- CL31 Specification Compliance Test Report
- CL31 SIT Report

b) A signed ST Plan

c) All Regression Test procedures are distributed and available to designated test locations.

d) A draft NWS Engineering Modification Notes #92 and #80 are available for each test location. ASOS ACU firmware V2.79S and DCP V2.0 EPROMS are also available.

e) The Limited Production CL31 Replacement Ceilometers with bird abatement devices are available at each test location (Note: Pre-production units are deemed acceptable per OS&T & OPS agreement).

f) All ASOS test systems involved in the ST are base-lined and certified as operating without problems.

g) Temporary CL31 mounting hardware are delivered for installation on the ST0 system at SFSC, Sterling, VA and at AOS Second-Level Engineering Support Center, Oklahoma City, OK system (See Figure 5)*

*NOTE: This temporary mount will be used at a majority of the OT&E sites which do not have an available spare pedestal on ASOS for the CL31 when it will operate in parallel with the CT12K ceilometer. Therefore, the mounts are needed only during the OT&E, not for national deployment of the CL31. The installation instructions will be validated when the temporary mount is installed on ST0. These validated instructions will be provided to the NWS regional ASOS focal points by the CL31 Project Manager (OST11). The regional focal points will coordinate with the WFO Electronic Technicians to purchase the required materials locally and install the temporary mounts at the affected OT&E sites prior to the

start of the OT&E.

h) An ST Test Readiness Review (i.e., “Kick-Off Meeting) is conducted with the TRG for its consensus agreement to proceed with the start of the ST (See Section 2.3.1 Pre-ST Activities).

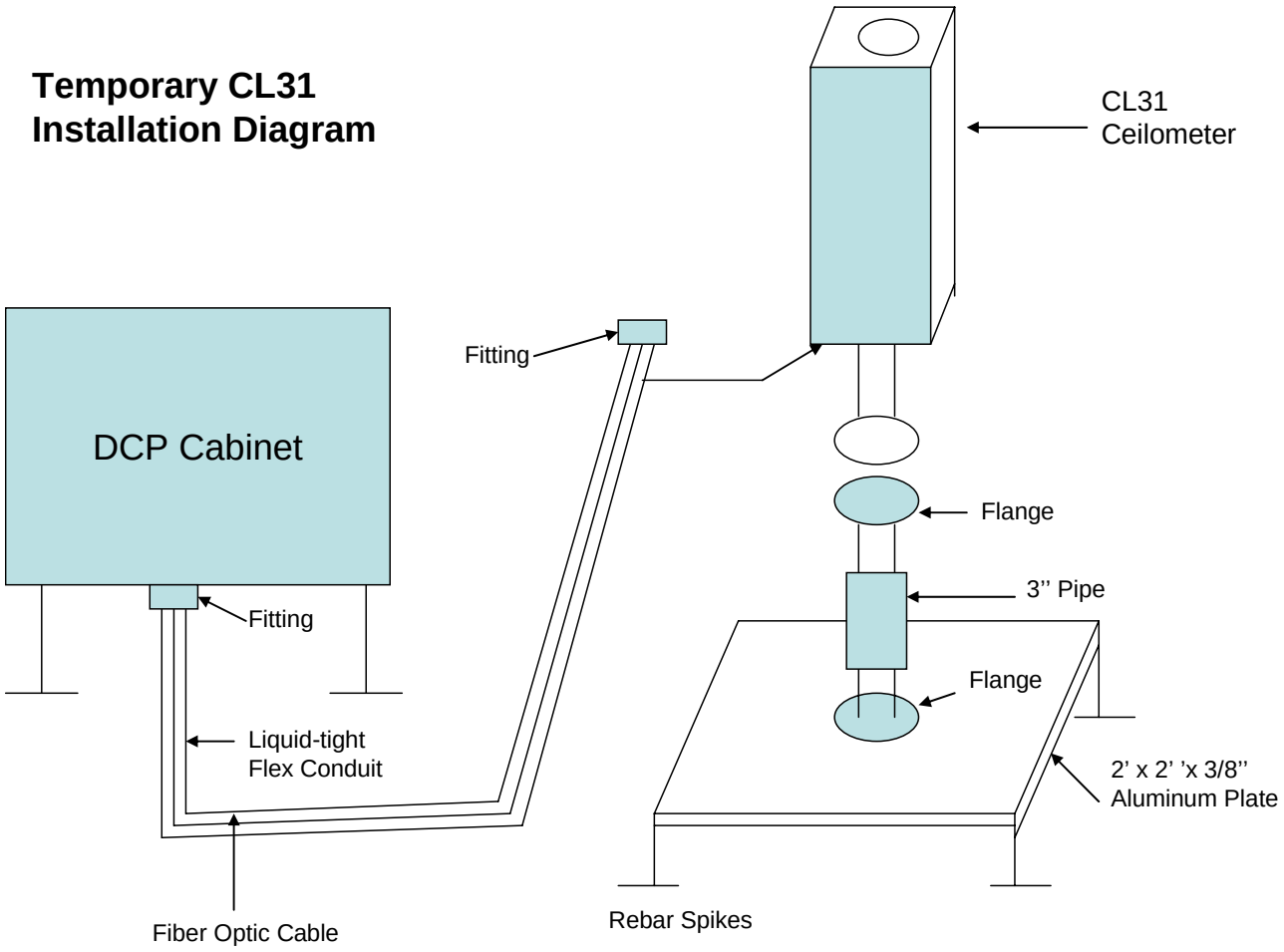

Figure 5: Temporary CL31 Installation Diagram

PART II

1.0 Method of Accomplishment

The following sections provide the test schedule, descriptions of the test facilities, the test system configurations, the required test resources, and the methodology for how the ST will be conducted.

2.0 Schedule

The ST will start with a "kick-off"/ ST Readiness Review meeting with the TRG to discuss test strategies and schedules. The ST will be performed as specified in the following Table 2. The ST will conclude with a "wrap-up" meeting to finalize recommendations to the ACCB Chair.

Test team members will use all test systems as required. On Thursdays during the ST, a meeting will be convened by the Test Director to review the problems documented on TTR forms during the week and to assess the status of the ST. If the TRG deems deficiencies to be critical Impact 1/urgent Priority 1, these test trouble reports will be forwarded to the ATRB for review and approval. If the ATRB agrees the deficiencies are "urgent", the ATRB Chair will task the ASOS Software Manager or the ASOS CL31 Project Manager, as appropriate, to correct them. The revised ACU software or sensor firmware will be subject to a limited ST retest. Depending on the time required for deficiency correction, revisions to the test schedule will be required. At the end of the ST, the TRG will recommend to the ATRB whether to proceed to the OT&E.

Table 2 - Test Schedule

Dates	Duration	Action
Delivery of CL31 Ceilometers for ST		Ceilometers and Mod Note ready
Day 1	1 day	ST kick-off meeting
Day 2	1 day	Install CL31 Ceilometers (per mod notes) At NWSH, NWSTC, SFSC, and Charleston Naval Shipyard, NC
Day 3 - Day 16	14 days	ST at WSH and SFSC
Day 17 - Day 18	2 days	Fix ST problems (if necessary)
Day 19 - Day 21	3 days	Retest (if necessary)
Day 22	1 day	Wrap-up meeting
Day 23 - Day 36	14 days	Prepare ST test report

3.0 Test Facilities

The Sterling Field Support Center (SFSC), Sterling, VA; WSH, Silver Spring, MD; NWS Training Center (NWSTC), Kansas City, KS; the FAA AOS Second-Level Engineering Support Center, Oklahoma City, OK; the FAA Technical Center (FAATC), Atlantic City, NJ; and the U.S. Navy SPAWARSYSCEN, Charleston, SC will participate in the ST. The primary ASOS test systems include the WSH's Single Cabinet ASOS (SCA) and SFSC's multiple Data Collection Platform system ST0. The ASOS Sensor Emulation Software (ASENSE V2.05 or latter versions) program will be used to emulate specified ASOS sensors when needed. Additional ASOS systems will be used to validate the draft NWS Modification Notes #92 and #80 and to supports "baseline," "free-play," and stability tests. These will be selected for ASOSs test systems from the above listed test facilities.

3.1 SFSC

The SFSC, an NWS facility for testing surface and upper air observation systems, is located in Sterling, Virginia. The SFSC has two ASOSs that will be used for testing – 1) ST0 and 2) ST1. ST0 (see Figure 6) will be used to validate specific software fixes and enhancements; it is configured as an operational system.

ST0 ASOS Peripherals, Interfaces & Sensors

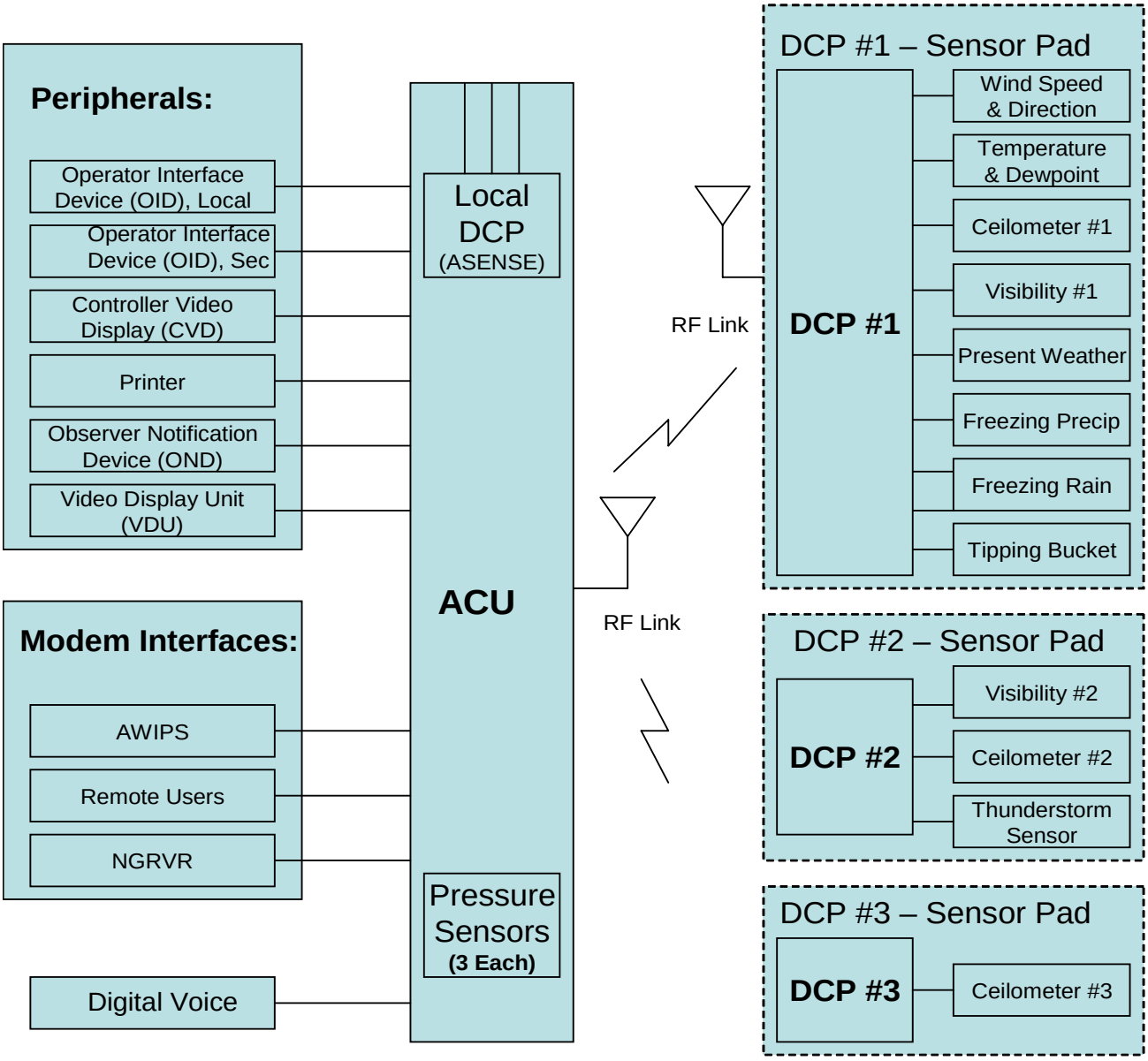

Figure 6: ST0 ASOS Configuration

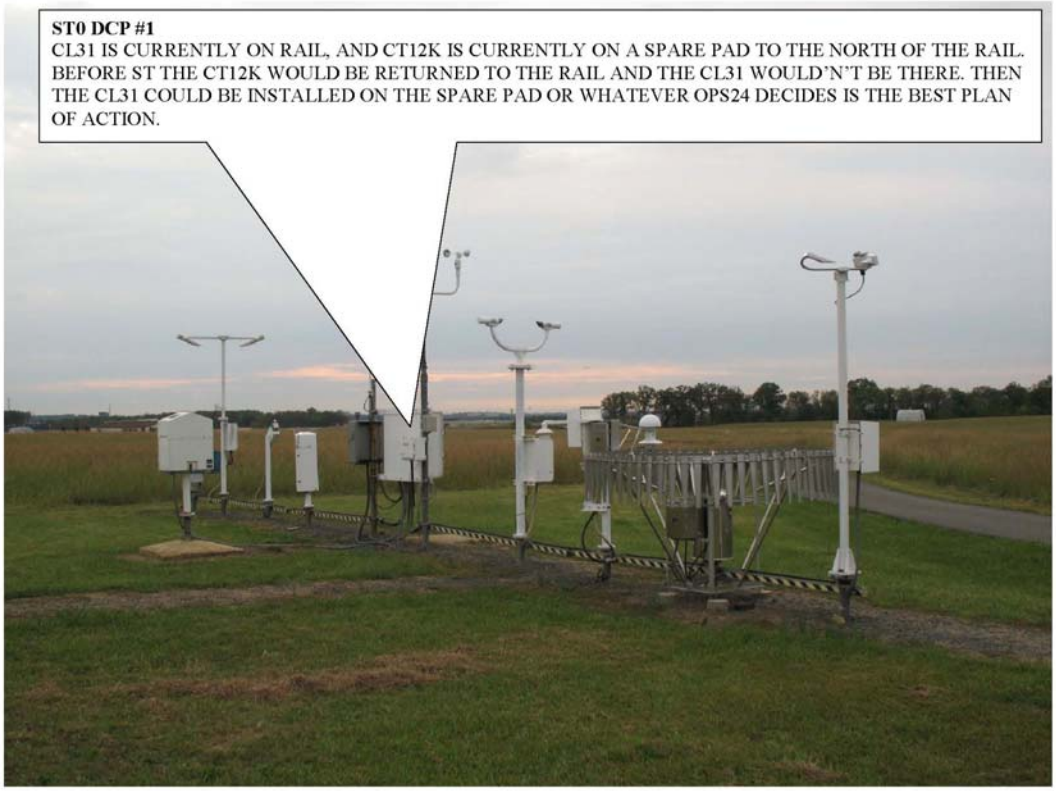

Figure 7: ST0 DCP#1

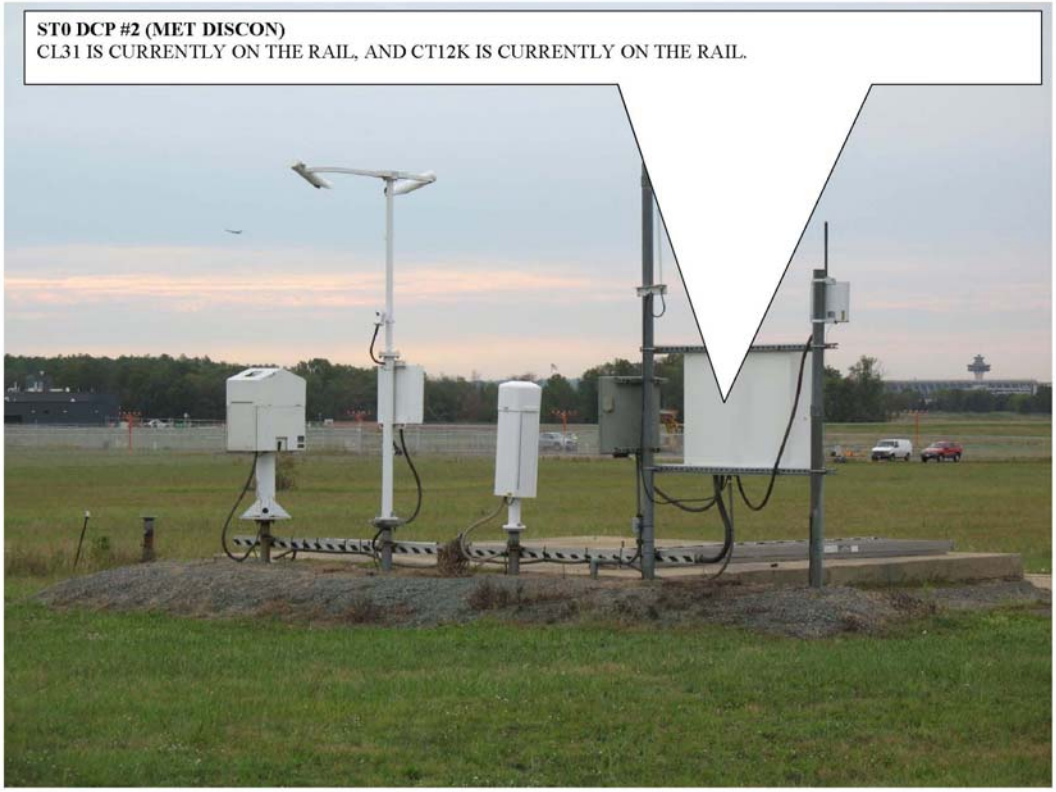

Figure 8: ST0 DCP#2

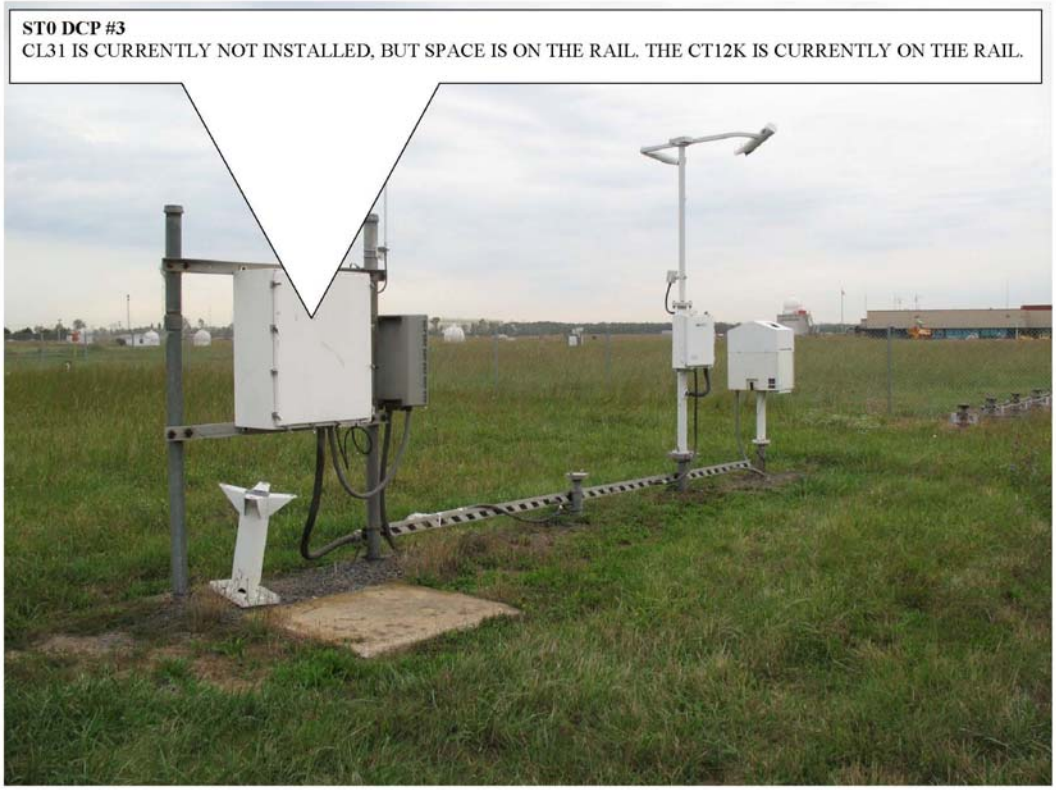

Figure 9: ST0 DCP#3 DCP

During the ST, the ST0 (see Figure 6) will use V2.79S software; the DCPs will use V2.0 EPROMS. The CL31 Ceilometers will be first configured as a "TEST" sensor, the CT12K will be configured as the "OFFICIAL" sensor, and the stability test and regression tests will be performed. Subsequently the CL31 ceilometers will be configured as an "OFFICIAL" sensor and the stability test and regression tests will be performed (see Table 4 – Test Setup). The ST1 (see Figure 10) ACU will use V2.79S software, the DCP will use V2.0 firmware. ST1 will be used as a control system (i.e., no test procedures will be performed on this system) to provide side-by-side performance comparison, if necessary. ST1 will also be used during ST for the Meteorological Comparison Evaluation. Both the CT12K and CL31 ceilometers will be interfaced on each DCP with the CL31 installed on a temporary pedestal. The CT12K will be initially configured as the "OFFICIAL" sensor, and the CL31 will be the "Test" sensor.

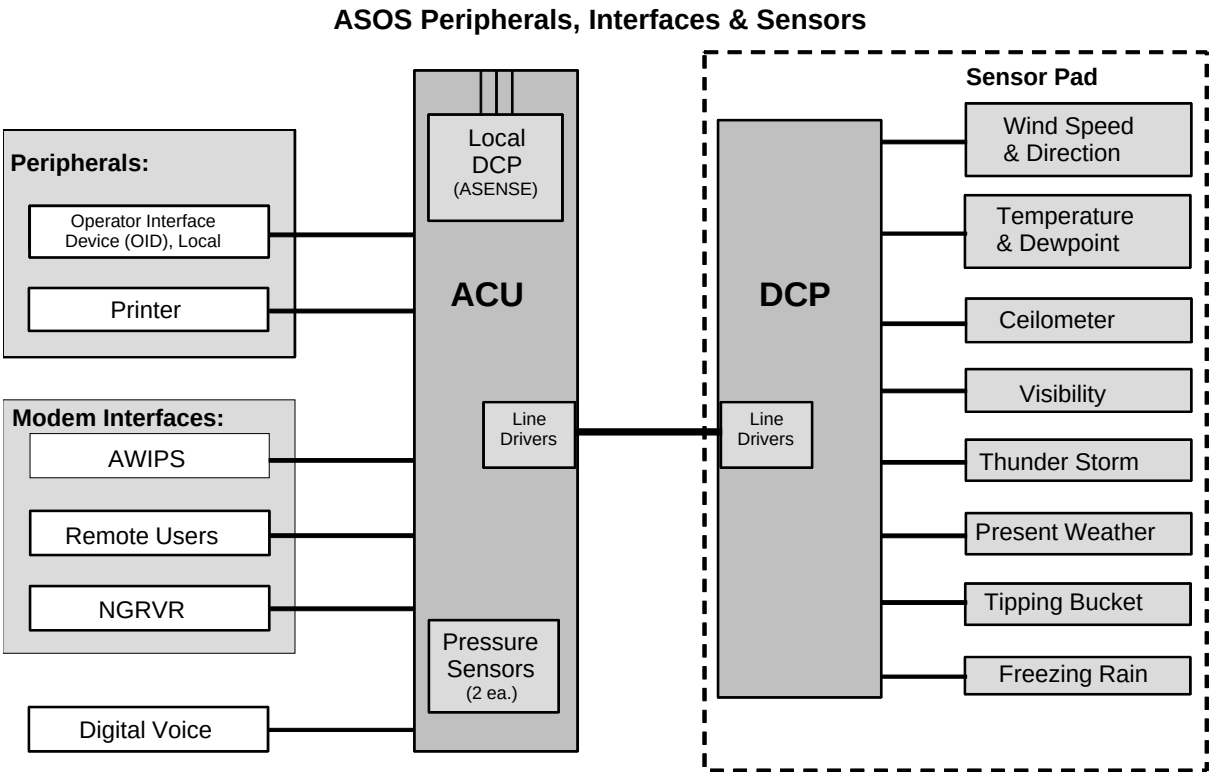

Figure 10: ST1 ASOS Configuration

3.2 WSH

The WSH is located at Silver Spring, Maryland and has one ASOS test system (SCA).
The SCA ASOS (see Figure 11) resides on the 6th floor of SSMC2. This system is normally used by ASOS software programmers to develop and test all future ACU software loads/releases. The SCA will be used during the ST to validate the ASOS V2.79S functionality in a unique SCA environment. During the ST, the ACU will use V2.79S software. The CL31 Ceilometer will be configured as an "OFFICIAL" sensor, and the stability test and regression tests will be performed.

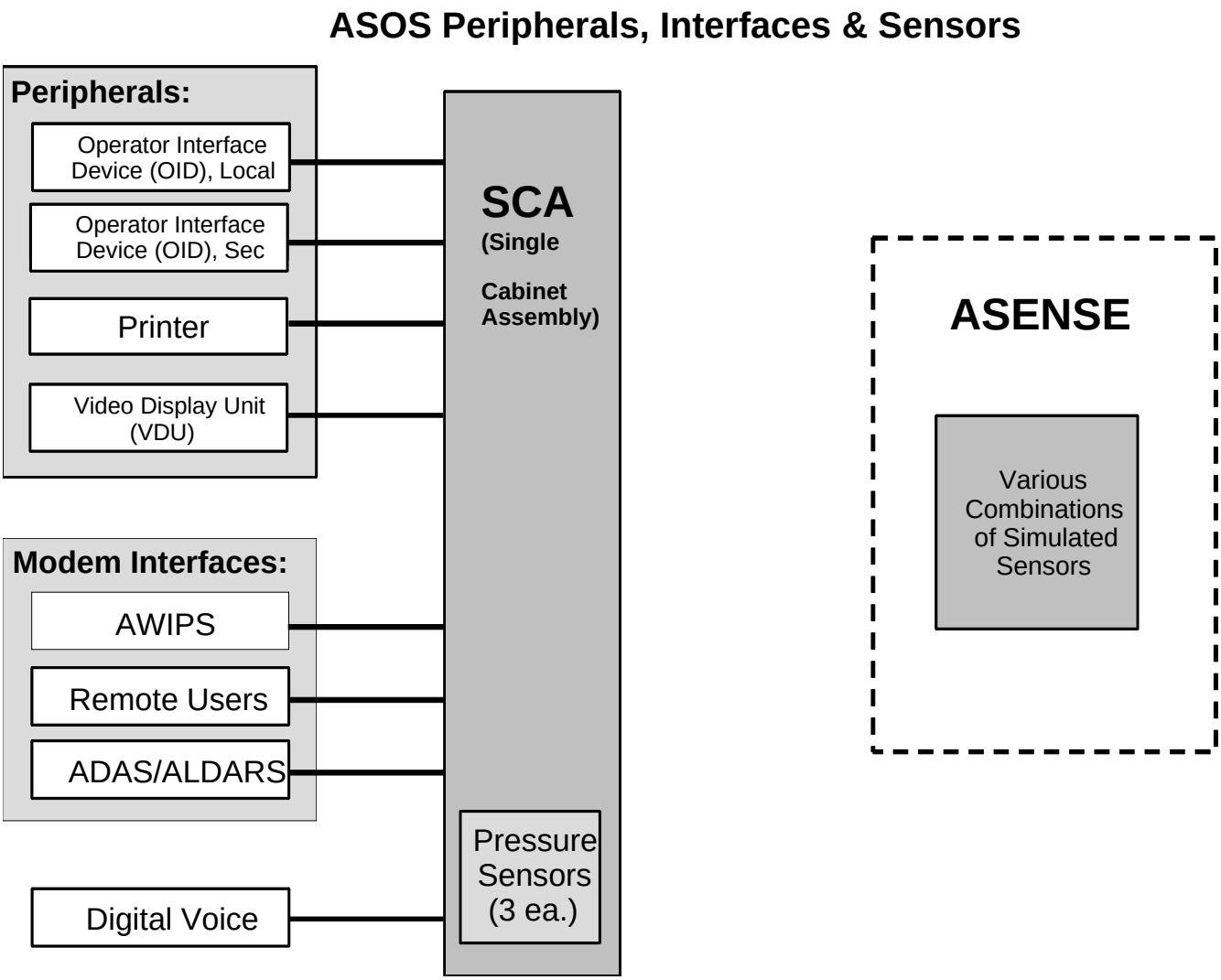

Figure 11: SCA Configuration

3.3 SPAWARSYSCEN

The U.S. Navy 1 (Gold) ASOS system (see Figure 12) at the SPAWARSYSCEN, Charleston, SC, will be used to evaluate the Draft NWS Engineering Modification Notes 92 and 80 as well as support “free-play” testing of the CL31 Ceilometer and the ASOS V2.79S ACU software. The CL31

Ceilometer will be configured as an “OFFICIAL” sensor. The Navy 1 ASOS system is shown below:

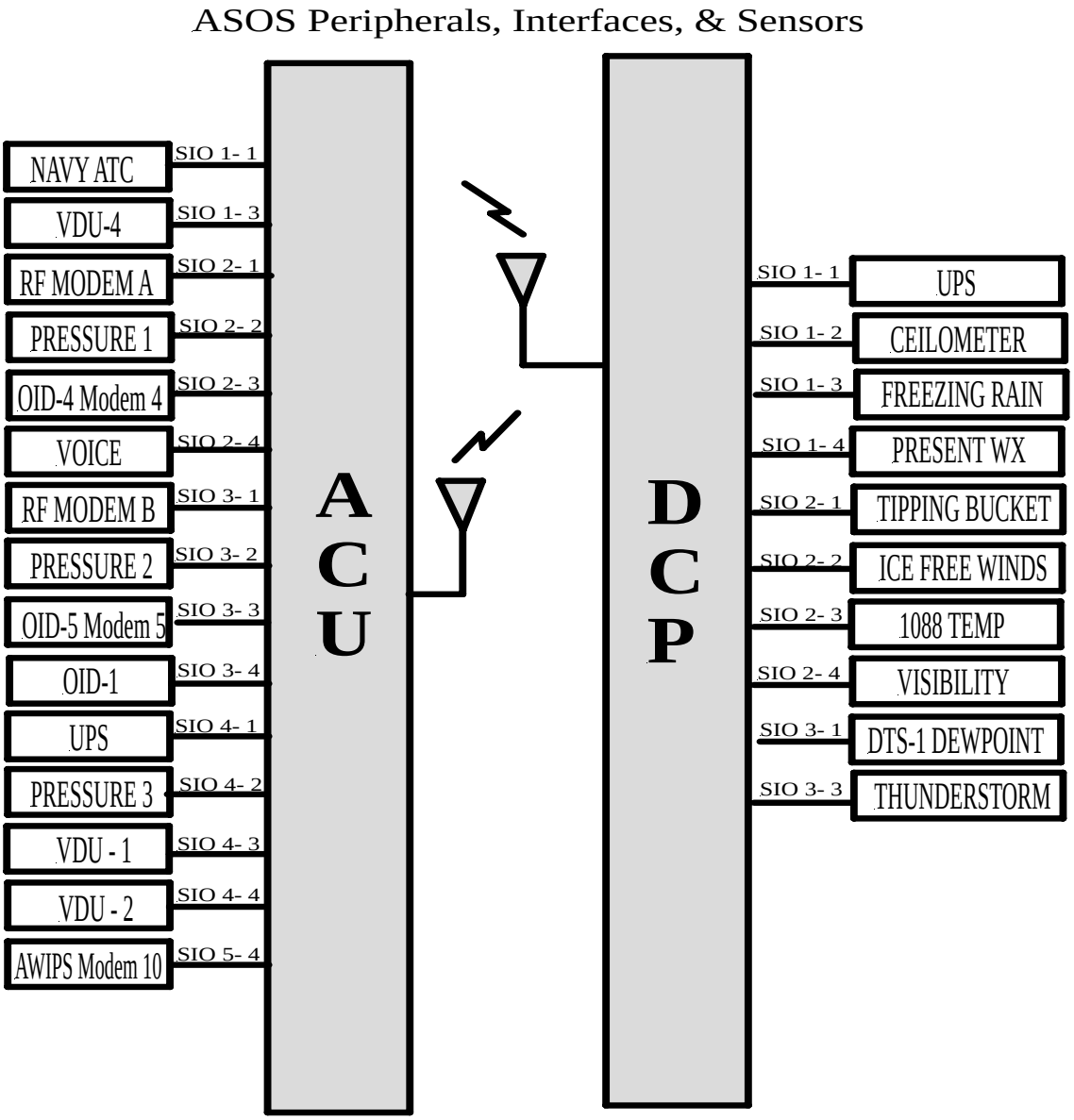

Figure 12: Navy 1(Gold) ASOS Configuration

3.4 NWSTC

The Single Cabinet ASOS (SCA) system at the NWSTC will be used to evaluate the Draft NWS Engineering Modification Notes 92 and 80 as well as support "free-play" testing of the CL31 Ceilometer and the V2.79S ACU software. The configuration for this system is given below:

Figure 13: NWSTC Single Cabinet ASOS (SCA) Configuration

Briefly it has a Visibility sensor, AWPAG, DTS1, 1088, CT12K Ceilometer, IFW, and Present Weather sensor with 2 additional sensor pads.

3.5 FAATC

The FAA Technical Center (FAATC), Atlantic City, New Jersey, in conjunction with test personnel at SFSC, will support the FAA's Weather System Processor (WSP), AWOS Data Acquisition System (ADAS)/ Automated Lightning Detection and Reporting System (ALDARS), and FTI communication interface tests. NOTE: The ASOS Controller Equipment (ACE-IDS) will be tested

at SFSC by the NWS using a Personal Computer operating with ACE-IDS simulation software provided the FAA. A dedicated FTI communication line will be activated between ST0 at SFSC and the FAATC by October 2008. This line will be used to test with the FAATC's ADAS/ALDARS test bed and, if a connection from the FTI communication drop at the FAATC can be installed in time to the FAATC's WSP test bed, also to the WSP. If a problem occurs with the new FTI line, the original codex modems and dial-up connection will be used to validate these connections. Most ASOS communications are being replaced with FTI communication. Therefore, the new dedicated FTI line between these two test facilities will be an important test feature in this and future STs.

3.6 AOS Second-Level Engineering Support Center

The AOS Second-Level Engineering Support Center is used to validate the draft NWS Engineering Modification Note 92 and 80 to swap out the old CT12K for the CL31 and swap out the ASOS ACU firmware for V2.79S and the DCP EPROM for V2.0 as it would be completed during national deployment of the new sensor. The site will also perform "free play" exercise of the ASOS test system as appropriate.

4.0 Resources

This section identifies the personnel, documentation, test responsibilities, and division of resources among the ASOS test systems at WSH, SFSC, NWSTC, SPAWARSYSCEN (Charleston, SC), and AOS Second-Level Engineering Support Center, and the FAATC. Test personnel from various sections within WSH, NWSTC, FAA, US Navy, and AOS Second-Level Engineering Support Center will conduct the ST.

4.1 Hardware/Software

The CL31 sensor and the V2.79S software will be tested in accordance with the ST test schedule defined in Part II, Section 2.0, and the test procedures identified in this document.

No specific tests will be conducted at the other agencies' ASOSs except for stability test, "free-play", visual inspection of the displays, and for verification of the Engineering Modification Notes #92 and #80. However, the ASOS Regression Test procedures will be available for use if desired.

The ASOS ACU firmware V2.79S and DCP EPROM V2.0 will be the primary version used for the ST at all participating test facilities

<u>ST0 ASOS at SFSC</u>

ST0 has three DCPs and is configured as a large hub airport system with meteorological discontinuity sensors. It can be re-configured to represent additional ASOS configurations. One of the DCPs is configured with collocated backup visibility and ceilometer sensors. Radio links are used for communications between the ACU and DCP. ST0 will be used during the ST to:

- Conduct regression tests related to the normal interaction with the ASOS at the various sign-on levels, including editing and augmenting at the observer and air traffic levels,

maintenance actions at the technician level, and system manager level functions.

- Perform specified validation and regression tests. ST0 will be used to test specified procedures if any of the following are required of the ASOS configuration:
  - Multiple DCPs
  - Physical reconfiguration of sensors or DCPs.

- ST0 will be configured to emulate unique systems in the field.

ST1 ASOS at SFSC:

ST1 is configured as a small airport (one DCP) system with a pair of line drivers (digital repeaters with hard wire connections) between the ACU and the DCP. ST1 will be used during the ST to operate as a "control" system to provide side-by-side comparison of the display functions and observations. No test procedures may be conducted on this system. Observations will be checked to assess whether they are representative of site conditions.

SCA ASOS at WSH:

The SCA system in the WSH's ASOS Development Laboratory will be used during the ST for both regression and validation tests as needed.

ASOS Interfaces

The following items, where available and applicable, can be configured as part of the ST:

- ADAS
- ALDARS
- ACE-IDS
- Next Generation RVR (NGRVR)
- WSP
- Advanced Weather Interactive Processing System (AWIPS) communication using Local Data Acquisition and Dissemination (LDAD).

4.2 Documentation

Updated support documentation and test procedures will be used in the ST and reference to these documents will be made as required throughout the test. The list of documentation (with the office of responsibility in parenthesis) and procedures includes, but is not limited to, the following documents:

- ST plan for the Automated Surface Observing System Ceilometer Replacement (OPS24)
- ST procedures and associated data sets (located at each ASOS Test System) (OPS24)
- Test Trouble Report forms available at each ASOS test site (OPS24) (See Attachment 2)
- Test Logs (OPS24) (See Attachment 3)
- NWS Engineering Modification Note #92 for the CL31 Ceilometer (OPS12).

- NWS Engineering Modification Note #80 for the ASOS ACU firmware and the DCP EPROM (OPS12)

4.3 Personnel

The following describes the major roles and responsibilities of the test personnel.

Test Director - Ensures all tests defined for the ST are completed and the results properly documented in the ST report. Responsible for collecting and presenting all test trouble reports to the TRG for classification. Following completion of the ST, the Test Director will call a "wrap-up" meeting for the TRG, detail to the ACCB Chair what was tested, report the ST conclusions, and recommend whether to proceed with the OT&E. Ensures all test trouble reports documented and classified during the ST are forwarded to the proper WSH organization or board for adjudication.

Test Coordinator - Responsible for the daily conduct of the ST to ensure testers assigned are present, test procedures are conducted, a log of all completed test procedures is kept (see Attachment 3), test trouble report forms are provided to the testers on duty, and all completed forms are provided to the Test Director each day; informs the Test Director of any problems encountered not resolved and briefs the director on the status of the test; writes the ST report to document the test results and recommendations.

Test Team Member - Responsible for performing individual test procedures as assigned; documents the results of each test and completes trouble report forms when problems/discrepancies are observed. Provides the test coordinator with comprehensive technical information on how the tests were conducted and any problems encountered. For interface testing, the tester is responsible for the setup of the various FAA and NWS communication interfaces. Ensures that all observations are provided to the assigned WSH personnel for analysis.

Electronics Technician (El Tech) - Responsible for maintaining the ASOSs under test, installing software and other hardware as appropriate, and commenting on NWS Engineering Modification Notes used during the installation of software/hardware. Configures the ASOS test system(s) for individual tests, reports any problems observed to the test coordinator, and takes maintenance action when hardware failures occur.

Data Analyst - Upon request by the Test Director, responsible for reviewing all METAR/SPECI observations and Standard Hydrometeorological Exchange Format (SHEF) products for correctness.

The ST test team will consist of the following personnel:

Table 3 - Test and Technical Support Personnel

Name	Function	Telephone
Khien Nguyen (OPS24)	Test Director/PAMS	301-713-0326 x177
Joseph Fiore (OPS24)	CT12K/CL31 Met. Comparison Eval. Team Leader	301-713-0326 x119
Jennifer Dover (OPS22)	SFSC coordinator	703-661-1259
James Brand (FAATC)	ADAS/ALRADS test bed	609-485-8185
Anna Merkel (FAATC)	WSP test bed	609-485-4838
Raymond Bahavar(FAA/AJW-14A2)	AOS Engineering Support Center	405-954-9640
Wayne Knight (SPAWARSYSCEN)	Navy test bed	843-218-4818
Robert Retzlaff (NWSTC)	NWSTC test bed	816-880-9368
Joe Devost (OPS12)	NWS Mod Notes 80 and 92	301-713-1833 x 156
Dave Eckberg (SAIC)	SFSC hardware	703-661-1288
Brian Rice (SAIC)	SFSC regression tester	703-661-1259
Peggy Hoch/Hak Kim (OPS23)	ACU V2.79S and DCP 2.0 EPROMS – ASOS Software problems	301-713-0191 x 165
Richard Parry/Chet Schmitt – OPS12	ASOS data problems	301-713-2093 x 109
Joel Williams (OST11) Richard Lewis (OST32) Aaron Poyer (SAIC)	Ceilometer sensor problems	301-713-3400 x 114
Kevin Conaty (OCIO12)	AOMC ASOS operations	301-713-0864 x 170

5.0 Test Methodology

The following sections provide a description of how the ST will be conducted. It will be the responsibility of the Test Director to ensure the test is performed as outlined. Any deviation from the test methodology will be documented and provided to the ST testers prior to conduct of the affected tests.

5.1 Pre-ST Activities

Prior to ST conduct, OPS24 will develop the ST Plan and test procedures. The Test Director will conduct a “kick-off” meeting for the ASOS TRG detailing what will be tested, how any discrepancies will be documented, and the test schedule. After the “kick-off” meeting, the Test Director will commence the ST.

The start of the ST is contingent upon the delivery of the following:

- Signed ST Plan distributed to all participants in the ST
- Limited production Vaisala model CL31 ceilometers (with bird abatement device) for use in the ST
- ASOS ACU V2.79S software provided on a Compact Disc (OPS23)
- Draft NWS Engineering Modification Note for the CL31 Ceilometer (OPS12)
- SFSC, Sterling, VA, ST0 and ST1 ASOS test systems certified as ready(SAIC)
- WSH, Silver Spring, MD, SCA ASOS test system certified as ready (OPS23)
- SPAWARSYSCEN, Charleston, SC, ASOS test system certified as ready
- NWSTC ASOS (Class II) test system certified as ready (NWSTC)
- FAA AOS Second-Level Engineering Support Center, Oklahoma, OK, ASOS test system certified as ready (Oklahoma City, OK).

5.2 Installation

The ST will commence at WSH and SFSC concurrently. V2.79S software and the CL31 Ceilometers will be installed by a designated el tech using the NWS Engineering Modification Notes provided by the Maintenance Branch (OPS12).

After the software is initialized, testers will verify that all station constants and information are correct. The testers will compare the AOMC site-specific data files against the station constants to ensure their agreement.

After the V2.79S software and the CL31 sensors are installed, the ASOS test systems will operate unattended for 3 days to confirm stability prior to the initiation of: 1) conduct of formal regression test procedures, 2) conduct of formal validation test procedures; and 3) "free-play" operation. The "free-play" will consist of experienced ASOS users interacting with the ASOS to validate system performance and quality of the observations.

5.3 Test Conduct

Prior to ST commencement, the Test Director will conduct a ST readiness review with the TRG to

ensure all the prerequisites are in place before the ST can be started.

At the start of the ST, the Test Team will install the ASOS V2.79S software on all primary test systems (ST0, SCA), in accordance with the instructions contained in the NWS Engineering Modification Notes.

NWSTC, SPAWARSYSCEN, and FAA AOS Second-Level Engineering Support Center will install the CL31 Ceilometers in accordance to the draft NWS Engineering Modification Note #92 for the CL31 Ceilometer after validating the contents of the received equipment. They will receive the ASOS ACU firmware V2.79S on a Compact Disc along with the V2.0 EPROM for the ASOS DCP from WSH. The modification notes will be evaluated and comments forwarded to the test director.

The ST0 ASOS at SFSC and the SCA ASOS at WSH will be the primary test systems. These systems will be configured to simulate configurations found in use today at the field sites. The SCA, which does not have any real sensor, will be used in conjunction with the ASENSE to perform regression tests only. The ST0 will be tested as follows:

Table 4 - Test Setup

Test Setup	Ceilometer Sensors	ACU Software	EPROM	Test Performs
1	. **Install three CT12K sensors , each on a DCP**	V2.79D	V1.9	. **Baseline of test bed** **. Verify all three DCPs work properly**
2	**. Use one CT12K as "Official" sensor** **. Use one CL31 as "Test" sensor** **. Deconfigure the other two CT12K sensors**	**V2.79S**	**2.0**	**. Install one CL31 on temporary mount and evaluate Temporary Installation Mod Note** **. Perform Stability Test plus Regression Tests.**
3	**. Remove all three CT12K sensors** **. Install three CL31 on permanent mounts**	**V2.79S**	**2.0**	**. Evaluate Mod Note 92** **. Perform Stability Test plus Regression Tests.**
4	**.One CL31 as "Official"** **.One CL31 as "Met Discontinuity"** **.One CL31 as "Backup"**	**V2.79S**	**2.0**	**Perform Met Discontinuity Test**

The following sections describe the types of tests performed on each of the ASOS test systems and their respective interfaces used during the ST.

5.4 System Stability Test

This test will be conducted after the necessary software and hardware have been installed on the ASOS test system. A 72-hour stability test (no "hands-on" tests performed) will be conducted. The

displays on the OID/VDU will be inspected from time to time verify the system is stable and the displays are normal (i.e. no frozen screens, no loss of displays, no extraneous characters, screen flashing during METARs and SPECIs, and audible alarms during these events).

5.5 Regression Tests

All regression tests described in the Attachment 1 will be performed on ST0 system. The CL31 Ceilometer will be at first configured as a "TEST" sensor then as an "OFFICIAL". The ST1 system can be used as a reference side-by-side comparison if necessary. Any abnormalities or indications of non-compliant functional operations observed during the ST will be logged and called to the immediate attention of the ST Director. The Test Director will present the discrepancies (i.e., TTR) to the TRG for adjudication. The Test Director will forward all discrepancies to the ASOS Software manager for resolution. A copy of any discrepancies still pending at the conclusion of the ST will be provided to the OT&E Director as "Known Problems". Any critical problems may result in the TRG suspending the ST until they are fixed.

5.6 Real-time Monitoring of Observations

Testers will monitor observations/products as they are generated by ASOS, paying particular attention to any observations containing remarks or additive data (e.g., precipitation amounts, maximum/minimum temperatures, and three-hour pressure changes) and observations generated during periods when failed sensors are being backed up (either by the observer or the backup sensors). For observations containing remarks or additive data, review the 5-minute observations and the 1-minute data to verify their appropriateness and accuracy of the remarks. Periodically call the FAA voice phone, or turn up FAA voice speaker, and verify the observations (including the required remarks) are being voiced properly.

5.7 Review of Observations

Periodically review the observations in the same manner in which an observer would check the observations taken during the previous shift. For example, check temperature, dewpoint, wind shifts, pressure remarks, variable ceilings, and visibilities. Determine whether specials were taken properly. Evaluate the consistency of precipitation and temperature data from hourly data through 3-hour, 6-hour, daily, and monthly data. Specifically:

- <u>Hourly/Special Observations</u> -- During each shift, review the ASOS METARs and SPECIs from the previous shift.
- <u>Daily Summaries</u> -- Once per day, review the daily summary page to verify consistency with the additive data appearing in the hourly observations. Note: if the daily summary has been manually edited, agreement cannot be expected.

- <u>Monthly Summaries</u> -- Periodically review the monthly (to date) page to verify consistency with the daily pages.

5.8 Review SYSLOG Messages

Periodically review the SYSLOG, verifying that all messages correctly reflect system status. Follow up on all "CHECK THE SYSLOG" messages whenever they appear at the bottom of the OID One Minute display. Document any messages which are not routine.

Whenever a maintenance flag ($) is appended to a METAR or SPECI, check the SYSLOG to verify that the $ is warranted, determine the cause of the $, and take appropriate action. Actions range from signing on as "Technician" and clearing a data quality error to requesting maintenance.

5.9 Problem Reporting

Testers will use the TestTrackPro software to enter the TTR's into database as soon as possible so that the information is available to the test team and the software developer in a timely manner. User accounts and passwords will be available for the test members to access the TestTrackPro by using either the work station located near ST0 and ST1 or the website (http://webdev1.weather.gov/ttweb/login.htm).

PART III

1.0 Post-ST Activities

Following completion of the ST, the Test Director will conduct a final meeting for the TRG detailing what was tested and a summary of any discrepancies found, major findings, and recommendations. The TRG will review the materials presented by the Test Director and make a recommendation to the ASOS Software manager whether to proceed with the OT&E. After the final meeting, the Test Director will prepare a report of all test activities, including details of any deficiencies. The report will include findings and final recommendations. A copy of all outstanding deficiencies will be provided to the OT&E Test Team and the TRG.

2.0 Test Recommendations and Report

At the conclusion of the ST, the TRG will convene the ST wrap-up meeting to review the findings of the ST and to recommend whether to proceed with the OT&E. The decisions of the TRG are based on simple majority among the voting members. The voting members of the TRG are listed in Table 1.

A formal ST Report will be generated by the ST Director to document the TRG recommendation, the test status, and all problems found during the ST. The ST Director will present the ST results and TRG recommendations to the ATRB as part of the OT&E Test Readiness Review. The ATRB will decide whether to commence an OT&E.

Attachment 1 - **ASOS CEILOMETER REPLACEMENT REGRESSION TESTS CHECKLIST**

#	TEST #	Test Description	Duration	Pass/ Fail	Date	Site
1	02_18	**Sign On/Off Function Verification**	15 min			ST0
2	02_01	**UI Help**				ST0
3	02_04	**Command - Observation -** The CMD-OBS function allows the observer to generate corrected METAR/SPECI reports, transmit a pending SPECI before the edit time expires, and cancel a pending SPECI report before it is transmitted.	30 min			ST0
4	06_13	**Review 5-MIN Screen -** This procedure verifies characteristics of the REVUE RPT 5MIN Screen	20 min			ST0
5	02_14	**Review-Sensor** - This procedure tests the REVUE-SENSR function is available to all users except the Air Traffic Controller (ATC). The REVUE-SENSR function enables the user to view the 12 hour archive of raw sensor data, the last 10 minutes of algorithm processed sensor data, and sensor status information such as turning report processing on or off and whether the sensor is in automated or manual mode.	15 min			ST0
6	02_15	**Review SYSLOG** - This procedure tests the ASOS System Logging capability.	15 min			ST0
7	02_17	**TWR Function Verification**	15 min			ST0
8	02_19	**EDIT Function Verification**	30 min			ST0
9	03_01	**SPECI Generation** during hourly edit time and during edit time of another SPECI.	45 min			ST0
10	04_30p	**Visibility Data Validation**	30 min			ST0
11	09_01	**GENOB Function Verification**	1 ½ hrs			ST0
12	10_01	**HOT KEY User Verification**	15 min			ST0
13	11_06	**Tornado Hot Key** - Tests generation of tornado through different methods and combinations.	20 min			ST0
14	14_05p	**Obstruction to Vision Procedure -** Tests the generation of HZ, BR, FG, and FZDZ.	10 min			ST0

15	04_33p	**Present Weather Edit/Augmentation**	1 ½ hrs			ST0
16	04_40p	**Wind Edit Data Validation**	30 min			ST0
17	04_39p	**Wind Remark/REPRO**	1 hr			ST0
18	02_08	**Command-Time - V**erifies or corrects the ASOS site's time. The TIME function calls the AOMC and synchronizes the site's time to the AOMC's time.	15 min			ST0
19	03_07	**Editing Present Weather during hourly**	½ hr			ST0
20	04_27p	**Ceiling Special (Falling Below Threshold)**	1 ½ hr			ST0
21	04_31p	**Visibility Special (Falling Below Threshold)**	1 hr			ST0
22	14_02p	**15-Min PX Counter Verification**	1 hr			ST0
23	14_06p	**PWINO, FZRANO, TSNO, AND PNO** Special Notice Remarks	15 min			ST0
24	20_2	**NGRVR Testing -**Verifies edited and automated RVR data, encoding in METAR/SPECIs, SPECI generation.	3 hrs			ST0
25	20_4	**Ground to Air (GTA) Radio Verification** - Verifies the GTA radio is operational by checking that all values on the maintenance page are "P".	15 min			ST0
26	20_6	**Navy ATC Interface Test -** Checks ASOS/Navy ATC interface for proper output to the ATC monitor.	1 hr			ST0
27	13_06	**SKY SPECIALS Checkout**	30 min			ST0
28	14_01	**Present Weather Identifiers/Remarks Verification**	2 ½ hrs			ST0
29	14_08	**SQUALL SPECIAL Verification**	15 min			ST0
30	14_01	**Present Weather Identifiers/Remarks Verification**	2 ½ hrs			ST0
31	20_3	**ACE Interface Test** - Checks ASOS ACE interface for proper output to the ACE simulator				ST0
32	20_1	**ADAS/ALDARS Interface to ASOS Test** - Checks ASOS response to ALDARS data.				ST0
33	20_10	**Verification of ADAS 1-Minute Data for IFW, DTS1, and AWPAG**				ST0
34	20_ 5	**ASOS to AWIPS Interface Verification -** Verifies AWIPS ingests and stores ASOS products and these products can be displayed on AWIPS and that AWIPS distributes ASOS products appropriately.	20 min			SP1 ST0
35	20_09	**WSP Interface Test**				SP1
36	CL31-MD01	**CL31-Meteorological Discontinuity Test #1**	1 ½ hour			ST0

Attachment 2 - ASOS Test Trouble Report

TYPE OF DEFECT:
__System Deficiency
__Enhancement
__Modify Current Feature
__Documentation/Procedure
__Hardware
__Watch Item

TEST ACTIVITY:
__FAT __SAT __OT&E
__Demonstration __Other

PRIORITY: __Emergency __Urgent __Routine

SUBSYSTEM/COMPONENT:
_Algorithm _Comms _Sensor _Simulator
_User interface _Voice _Other

REPEATABILITY:
__Could not repeat __Didn't try
__One time occurrence __Sometimes __Always

CONFIGURATION/TEST DATA:
__Live data feed __Simulator

SEVERITY:
__No Impact
__Cosmetic
__Inconvenience
__System Up -w/no workaround
__System Up -w/workaround
__CRASH - w/no workaround
__CRASH -w/workaround

ATTACHMENT: __ pages

TTR NO: *(Assigned by Test Track program)*

LOCATION (SID): _____ **SOFTWARE VERSION:**

TITLE/SUMMARY:

DATE/TIME DISCOVERED: _____ **ORIGINATOR:**

DESCRIPTION, CAUSE OF PROBLEM:
(References: ECPs/RCs/OTRs:_____ Test procedure/steps:____)

Attachment 3 - Test Logs

The following log will be at each ASOS test system. The test team member will complete this form indicating the date/time each test is conducted, the name of each test procedure completed, and the tester's name. This will be a record to verify that all test procedures were completed, when they were performed, and by whom.

TEST LOG

SYSTEM: _____

DATE	TIME	PROCEDURE	PERSON	P/F